PRODUCT APPROVAL FOR HR-250DG IMPACT-RESISTANT CAPTURED DRY GLAZED CURTAIN WALL SYSTEM WITH MULTIPLE GLAZING INFILLS FOR USE IN HURRICANE ZONES REQUIRING LARGE MISSILE IMPACT PROTECTION.

GENERAL NOTES:

1. HR-250DG CAPTURED DRY GLAZED CURTAIN WALL SYSTEM LARGE MISSILE IMPACT LAMINATED GLASS, SHOWN ON THIS PRODUCT EVALUATION DOCUMENT (P.E.D.) HAS BEEN VERIFIED FOR COMPLIANCE IN ACCORDANCE WITH THE 2020 (7th EDITION) OF THE FLORIDA BUILDING CODE. CURTAIN WALL SHALL NOT BE INSTALLED WITHIN HIGH VELOCITY HURRICANE ZONES (HVHZ).

   DESIGN WIND LOADS SHALL BE DETERMINED AS PER SECTION 1609 OF THE ABOVE MENTIONED CODE, FOR A BASIC WIND SPEED AS REQUIRED BY THE JURISDICTION WHERE THIS PRODUCT TO BE INSTALLED FOR A DIRECTIONALITY FACTOR Kd=0.85, USING ASCE 7-16 & SHALL NOT EXCEED THE MAXIMUM (A.S.D.) DESIGN PRESSURE RATING INDICATED ON NOTE 2. MAXIMUM (A.S.D.) DESIGN PRESSURE RATING INDICATED ON NOTE 2.

   IN ORDER TO VERIFY THE ABOVE CONDITION, ULTIMATE DESIGN WIND LOADS DETERMINED PER ASCE 7-16 SHALL BE FIRST REDUCED TO A.S.D. DESIGN WIND LOADS BY MULTIPLYING THEM BY 0.6 IN ORDER TO COMPARE THESE W/ MAX. (A.S.D) DESIGN PRESSURE RATINGS INDICATED ON NOTE 2.

   IN ORDER TO VERIFY THAT ANCHORS ON THIS P.E.D., AS TESTED, WERE NOT OVERSTRESSED, A 33% INCREASE IN ALLOWABLE STRESS FOR WIND LOADS WAS NOT USED IN THEIR ANALYSIS.

   THIS PRODUCT'S ADEQUACY FOR IMPACT AND CYCLIC RESISTANCE HAS BEEN VERIFIED IN ACCORDANCE WITH SECTION 1609.1.2 OF THE ABOVE MENTIONED CODE AS PER ASTM E 283, E330, E331, E1886 & E1996 BY ARCHITECTURAL TESTING REPORTS # 67773.02-401-44 AND #67773.03-401-44 AND AS PER PROTOCOLS TAS-201, TAS-202 & TAS-203 AND AAMA 501 (PER SECTION 1709.8.4) BY HURRICANE TEST LABORATORY REPORTS # 0105-0210-04, 0105-0511-04, 0105-0306-04, 0105-0717-04, 0105-0809-04 AND 0105-0919-04 AND PER REPORT # A407.01-801-18 BY ARCHITECTURAL TESTING, AND AS PER STRUCTURAL CALCULATIONS PERFORMED AS PER SECTION 1604 OF FLORIDA BUILDING CODE.

2. MAXIMUM DESIGN PRESSURE RATING FOR THIS CURTAIN WALL SHALL BE AS SHOWN ON SHEETS 8, 9, 10, 12, 13 AND 14 THRU 17.

3. THIS PRODUCT WILL NOT REQUIRE A HURRICANE PROTECTION DEVICE.

4. THIS PRODUCT IS APPROVED FOR AIR/WATER INFILTRATION (MINIMUM 15.0 PSF WATER PRESSURE).

5. HR-250DG CAPTURED DRY GLAZED CURTAIN WALL SYSTEM LARGE MISSILE IMPACT LAMINATED GLASS SHALL COMPLY WITH SECTION 2406 OF THE FLORIDA BUILDING CODE.

6. ALL STEEL FRAMING SHALL BE WELDED IN ACCORDANCE WITH THE AMERICAN WELDING SOCIETY A.W.S. D.1.1 REGULATIONS. USE CERTIFIED WELDERS. USE E-70XX ELECTRODES. ALL JOINT WELDING BETWEEN ANGLES AND STEEL STRUCTURE SHALL BE 3/16" FILLET WELD TYPE.

7. PROVIDE 3/4" MAX. LOAD BEARING SHIM SPACE, WHEN ALLOWED BY THIS P.E.D.

8. SEE ANCHOR SCHEDULES ON SHEETS 12, 13 AND 14 THRU 17 FOR ANCHOR TYPE IDENTIFICATION AND SPACING.

9. REMAINING COMPONENTS FOR THIS CURTAIN WALL SYSTEM SHALL BE AS INDICATED ON BILL OF MATERIALS, SHEETS 4 AND 5 OF THIS DRAWING.

10. ALL ALUMINUM EXTRUSIONS IN CONTACT WITH DISSIMILAR MATERIALS SHALL COMPLY WITH SECTION III-6 OF THE 2015 ALUMINUM DESIGN MANUAL.

11. SHOP DRAWINGS PREPARED BASED ON THIS APPROVAL AND TAKING INTO ACCOUNT THE SPECIFIC JOB CONDITIONS, SHALL BE SUBMITTED TO THE BUILDING OFFICIAL AS PART OF THE PERMIT DOCUMENTS.

12. SUBSTRATE MATERIAL ON THESE DRAWINGS AS "BY OTHERS" MUST WITHSTAND THE LOADS IMPOSED BY THE CURTAIN WALL SYSTEM.

13. THIS PRODUCT'S INSTALLATION SHALL COMPLY WITH ALL SPECS INDICATED IN THIS DRAWING PLUS ANY BUILDING AND ZONING REGULATIONS PROVIDED BY THE JURISDICTION WHERE PERMIT IS APPLIED TO.

14. (a) THIS P.E.D. PREPARED BY THIS ENGINEER IS GENERIC AND DOES NOT PROVIDE INFORMATION FOR A SITE SPECIFIC PROJECT; i.e. WHERE THE SITE CONDITIONS DEVIATE FROM THE P.E.D.

    (b) CONTRACTOR TO BE RESPONSIBLE FOR THE SELECTION, PURCHASE AND INSTALLATION INCLUDING LIFE SAFETY OF THIS PRODUCT, BASED ON THIS P.E.D., PROVIDED HE/SHE DOES NOT DEVIATE FROM THE CONDITIONS DETAILED ON THIS DOCUMENT. CONSTRUCTION SAFETY AT SITE IS THE CONTRACTOR'S RESPONSIBILITY.

    (c) THIS P.E.D. WILL BE CONSIDERED INVALID IF ALTERED BY ANY MEANS.

    (d) SITE SPECIFIC PROJECTS SHALL BE PREPARED BY A FLORIDA REGISTERED ENGINEER OR ARCHITECT WHICH WILL BECOME THE ENGINEER OF RECORD (E.O.R.) FOR THE PROJECT AND WHO WILL BE RESPONSIBLE FOR THE PROPER USE OF THE P.E.D. ENGINEER OF RECORD, ACTING AS DELEGATED ENGINEER TO THE P.E.D. ENGINEER, SHALL SUBMIT TO THIS LATTER THE SITE SPECIFIC DRAWINGS FOR REVIEW.

    (e) ORIGINAL P.E.D. SHALL BEAR THE DATE AND ORIGINAL SEAL AND SIGNATURE OF THE PROFESSIONAL ENGINEER OF RECORD THAT PREPARED IT.

15. PRODUCT MANUFACTURER'S LABEL SHALL BE LOCATED ON A READILY VISIBLE LOCATION AT PRODUCT IN ACCORDANCE WITH SECTION 1709.5 OF THE FLORIDA BUILDING CODE. ONE LABEL SHALL BE PLACED FOR EVERY OPENING.

INDEX:

SHEET 1: GENERAL NOTES, INDEX AND INSTRUCTIONS.
SHEET 2: HR-250 IMPACT RESISTANT CAPTURED CURTAIN WALL SYSTEM COMPONENTS.
SHEET 3: HR-250 IMPACT RESISTANT CAPTURED CURTAIN WALL SYSTEM COMPONENTS (CONTINUED).
SHEET 4: BILL OF MATERIALS.
SHEET 5: BILL OF MATERIALS (CONTINUED).
SHEET 6: ISOMETRIC ELEVATION FOR HR-250 IMPACT RESISTANT CAPTURED CURTAIN WALL SYSTEM.
SHEET 7: TYPICAL GLAZING DETAILS.
SHEET 8: MAX. FRAME WIDTH "b" & FRAME LENGTH "a" VERSUS A.S.D. DESIGN PRESSURE RATING (p.s.f.) SCHEDULE.
SHEET 9: MAX. A.S.D. DESIGN PRESSURE RATING FOR SINGLE SPAN STANDARD AND CORNER MULLIONS.
SHEET 10: MAX. A.S.D. DESIGN PRESSURE RATING FOR TWIN SPAN STANDARD, DOOR JAMB AND CORNER MULLIONS.
SHEET 11: OPTIONS FOR TWIN SPAN STANDARD, DOOR JAMB AND CORNER MULLIONS INSTALLATION.
SHEET 12: MAX. A.S.D. DESIGN PRESSURE RATING FOR SINGLE SPAN (HEAD & SILL) & TWIN SPAN (SILL ONLY) MULLION CONNECTIONS.
SHEET 13: MAX. A.S.D. DESIGN PRESSURE RATING FOR TWIN SPAN MULLION HEAD ANCHOR CONNECTIONS.
SHEET 14: MAX. A.S.D. DESIGN PRESSURE RATING FOR JAMBS AT SINGLE SPAN CURTAIN WALL FASTENED W/ 3/8"ø FASTENERS.
SHEET 15: MAX. A.S.D. DESIGN PRESSURE RATING FOR JAMBS AT TWIN SPAN CURTAIN WALL FASTENED W/ 3/8"ø FASTENERS.
SHEET 16: MAX. A.S.D. DESIGN PRESSURE RATING FOR JAMBS AT SINGLE SPAN CURTAIN WALL FASTENED W/ 1/2"ø FASTENERS.
SHEET 17: MAX. A.S.D. DESIGN PRESSURE RATING FOR JAMBS AT TWIN SPAN CURTAIN WALL FASTENED W/ 1/2"ø FASTENERS.
SHEET 18: HEAD CONNECTION DETAILS (SIDE VIEWS).
SHEET 19: HORIZONTAL CONNECTION DETAILS (SIDE VIEWS).
SHEET 20: SILL CONNECTION DETAILS (SIDE VIEWS).
SHEET 20A: HEAD, HORIZONTAL & SILL SEALING DETAILS (ISOMETRIC).
SHEET 21: HORIZONTAL SECTIONS AT STANDARD MULLION DETAILS (PLAN).
SHEET 22: JAMB CONNECTIONS AT HORIZONTALS (PLAN).
SHEET 23: CORNER MULLION DETAILS (PLAN).
SHEET 24: JAMBS CONNECTIONS AT INSIDE CORNER (PLAN).
SHEET 25: SILL & HEAD CONNECTION DETAILS FOR SINGLE SPAN & SILL CONNECTION DETAIL AT TWIN SPAN (PLANS).
SHEET 26: OPTION #1 FOR HEAD CONNECTION OF TWIN SPAN STANDARD MULLIONS.
SHEET 27: OPTION #2 FOR HEAD CONNECTION OF TWIN SPAN STANDARD MULLIONS.
SHEET 28: HEAD CONNECTION AT TWIN SPAN JAMBS.
SHEET 29: HEAD CONNECTION DETAIL FOR TWIN SPAN CORNER MULLION.
SHEET 30: MULLION AND JAMB SPLICES AT TWIN SPAN ONLY (PLAN).
SHEET 31: MULLION AND JAMB SPLICES AT TWIN SPAN ONLY (SIDE VIEW)
SHEET 32: CORNER MULLION SPLICE AT TWIN SPAN (PLAN).
SHEET 33: STANDARD, JAMB AND CORNER MULLIONS CONNECTION TO EXISTING INTERMEDIATE FLOOR STRUCTURE W/ DEAD AND WIND LOAD ANCHORS.
SHEET 34: JAMB AND CORNER MULLIONS CONNECTION TO EXISTING INTERMEDIATE FLOOR STRUCTURE W/ DEAD AND WIND LOAD ANCHORS (PLAN).
SHEET 35: DOOR HEADER CONNECTION TO CURTAIN WALL HORIZONTALS & DOOR SILL CONNECTION TO POURED CONCRETE STRUCTURE AND TO ADJACENT CURTAIN WALL MULLION (PLAN).
SHEET 36: DOOR JAMBS CONNECTION TO CURTAIN WALL.

INSTRUCTIONS:

STEP 1: DETERMINE A.S.D. DESIGN WIND LOAD REQUIREMENTS BASED ON WIND VELOCITY, BUILDING HEIGHT, WIND ZONE, USING APPLICABLE ASCE 7 STANDARDS.

STEP 2: GO TO SCHEDULE ON SHEET 8 TO DETERMINE MAXIMUM A.S.D. DESIGN PRESSURE RATING (psf) OF DESIRED GLASS SIZE BASED ON GLASS PANEL DIMENSIONS.

STEP 3: DETERMINE MAXIMUM MULLION AND JAMB SPAN "L"(FT) FOR A GIVEN MULLION EFFECTIVE SPACING "b", FOR SINGLE AND TWIN SPANS ON SCHEDULES ON SHEETS 9 AND 10.

STEP 4: USING SCHEDULES ON SHEETS 12, 13 AND 14 THRU 17 SELECT ANCHOR OPTION FOR MULLIONS AND JAMBS WITH A.S.D. DESIGN PRESSURE RATING EQUAL OR GREATER THAN A.S.D. DESIGN LOAD SPECIFIED IN STEP 1.

STEP 5: USING SCHEDULE ON SHEET 19, VERIFY MAXIMUM A.S.D. DESIGN PRESSURE RATING OF HORIZONTALS (IF USED) AND HORIZONTAL EXPANSION.

STEP 6: THE LOWEST VALUE OF A.S.D. DESIGN PRESSURE RATING RESULTING FROM STEPS 2, 3, 4 AND 5 SHALL APPLY TO THE ENTIRE SYSTEM.

THIS DRAWING SHALL ONLY BE USED TO OBTAIN PERMITS IN THE STATE OF FLORIDA

WALTER A. TILLIT JR. LICENSE No. 44167 STATE OF FLORIDA PROFESSIONAL ENGINEER

FLORIDA BUILDING CODE (Non High Velocity Hurricane Zone)

HR-250DG CAPTURED DRY GLAZED CURTAIN WALL SYSTEM
LARGE MISSILE IMPACT LAMINATED GLASS

Oldcastle BuildingEnvelope™
803 Airport Rd - Terrell, TX 75160
www.OldcastleBE.com - Phone 800-869-4567

REV. No	DESCRIPTION	DATE	REV. No	DESCRIPTION	DATE
1	-	-	3	-	-
2	-	-	4	-	-

F.R.L DRAWN BY:
05/13/2021 DATE
21-068 DRAWING No
SHEET 1 OF 36

©2021 TILTECO, INC

TILTECO INC.
TILLIT TESTING & ENGINEERING COMPANY
8355 N.W. 36th. St., Ste. 305, VIRGINIA GARDENS, FL 33166
Phone : (305)871-1530 . Fax : (305)871-1531
e-mail: tilteco@aol.com
CA-0006719
WALTER A. TILLIT Jr. P.E.
FLORIDA Lic. # 44167

P.E. SEAL/SIGNATURE/DATE

WALTER A. TILLIT JR. LICENSE No. 44167 STATE OF FLORIDA PROFESSIONAL ENGINEER

HR-250DG IMPACT RESISTANT CAPTURED CURTAIN WALL SYSTEM COMPONENTS

SCALE : 1/4" = 1"

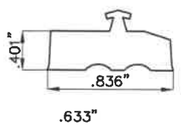

1 EXTERIOR GLAZING GASKET

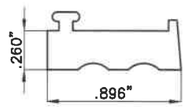

2 INTERIOR GLAZING GASKET

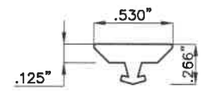

4 EXTERIOR PERIMETER GASKET CW-187

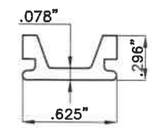

5 THERMAL ISOLATOR CW-6

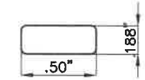

6 SETTING BLOCK CW-2101

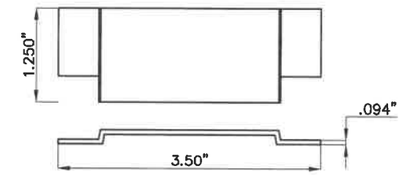

7 MULLION END CAP HR-FP-1

SCALE : 1/8" = 1"

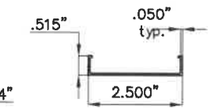

12 2 1/2" COVER CW-2

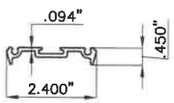

13 2 1/2" PRESSURE BAR ZG-60

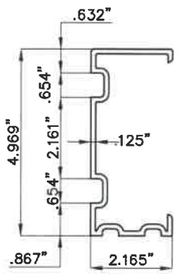

14 MULLION SPLICE HR-FP-20

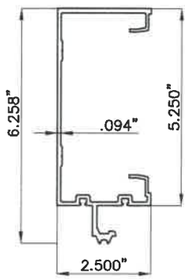

15 MULLION CW-1995

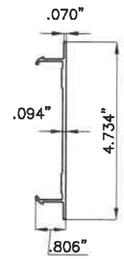

16 MULLION FILLER CW-1996

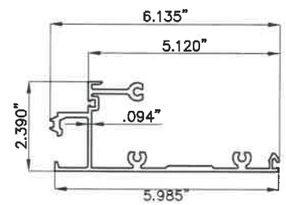

17 HEAD/SILL CW-1997

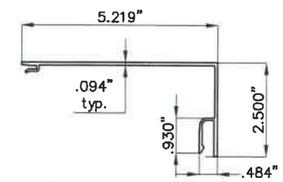

18 HEAD/SILL TRIM CW-1998

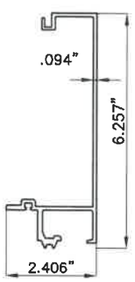

21 TWO PIECE JAMB FEMALE HALF CW-2002

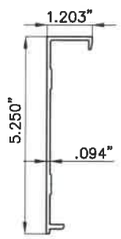

22 TWO PIECE JAMB MALE HALF CW-2001

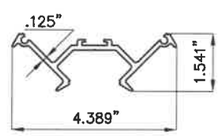

23 CORNER PRESSURE PLATE CW-2003

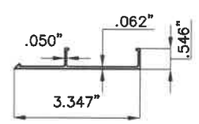

24 CORNER FACE CAP CW-2004

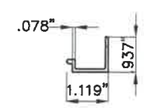

25 POCKET FILLER CW-2005

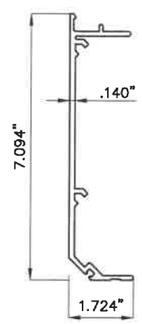

26 CORNER MULLION FEMALE HALF CW-2018

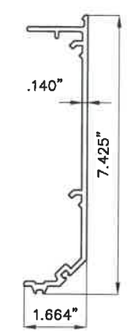

27 CORNER MULLION MALE HALF CW-2019

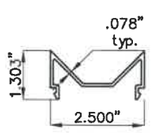

28 CORNER MULLION FILLER CW-2020

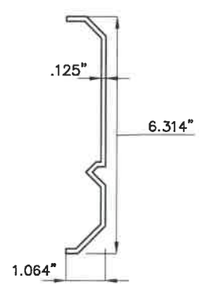

29 CORNER SPLICE CW-2021

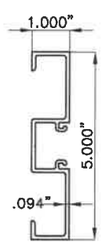

30 DOOR JAMB D-226

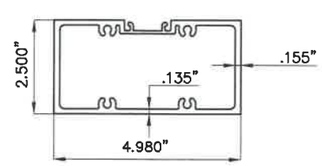

31 DOOR HEADER-OFFSET ARM FG-5172

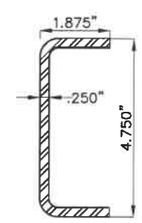

34 REINFORCING STEEL RS-25

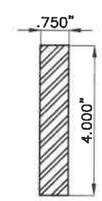

36 REINFORCING STEEL BAR

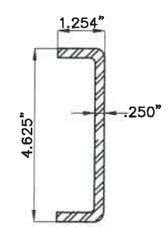

37 REINFORCING STEEL FG5000-PP-8

FLORIDA BUILDING CODE (Non High Velocity Hurricane Zone)

HR-250DG CAPTURED DRY GLAZED CURTAIN WALL SYSTEM
LARGE MISSILE IMPACT LAMINATED GLASS

Oldcastle BuildingEnvelope™
803 Airport Rd - Terrell, TX 75160
www.OldcastleBE.com - Phone 800-869-4567

REV. No	DESCRIPTION	DATE	REV. No	DESCRIPTION	DATE
1	-	-	3	-	-
2	-	-	4	-	-

F.R.L DRAWN BY:
05/13/2021 DATE
21-068 DRAWING No
SHEET 2 OF 36

©2021 TILTECO, INC

TILTECO INC.
TILLIT TESTING & ENGINEERING COMPANY
6355 N.W. 36th. St., Ste. 305, VIRGINIA GARDENS, FL 33166
Phone : (305)871-1530 . Fax : (305)871-1531
e-mail: tilteco@aol.com
CA-0006719
WALTER A. TILLIT Jr. P.E.
FLORIDA Lic. # 44167

P.E. SEAL/SIGNATURE/DATE

6/8/2021

WALTER A. TILLIT JR. LICENSE No. 44167 STATE OF FLORIDA PROFESSIONAL ENGINEER

HR-250DG IMPACT RESISTANT CAPTURED CURTAIN WALL SYSTEM COMPONENTS (CONTINUED)

SCALE : 1/4" = 1"

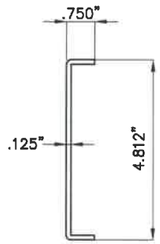

(38) BRAKE METAL SPLICE MALE HR-FP-13

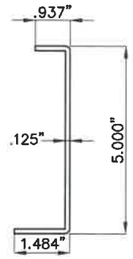

(39) BRAKE METAL SPLICE FEMALE HR-FP-14

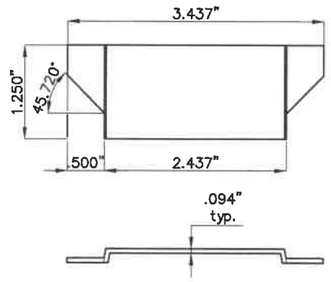

(47) 90° MULLION END CAP HR-FP-7

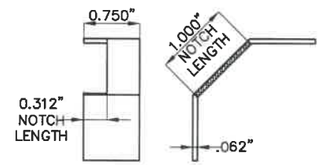

(48) WATER DIVERTER HR-FP-11

SCALE : 1/8" = 1"

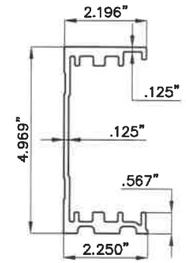

(50) HEAD ANCHOR SLEEVE HR-FP-15

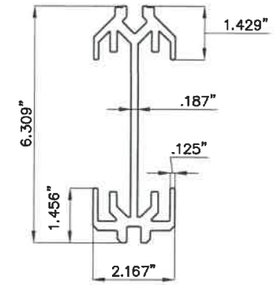

(51) HEAD ANCHOR SLEEVE CORNER HR-FP-17

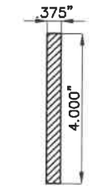

(52) STEEL REINFORCING

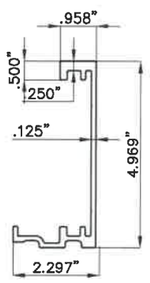

(53) JAMB HEAD ANCHOR SLEEVE HR-FP-16

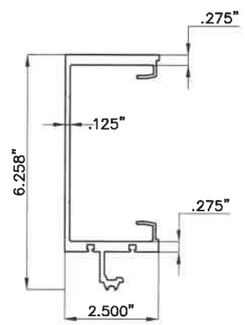

(54) HEAVY MULLION CW-2097

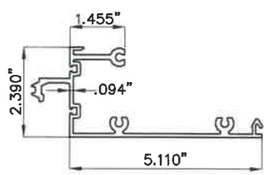

(55) OPEN BACK HORIZONTAL CW-2117

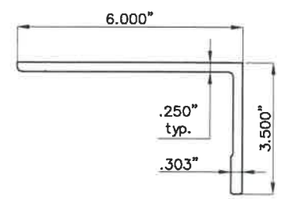

(61) HEAD ANCHOR LEFT HR-FP-24

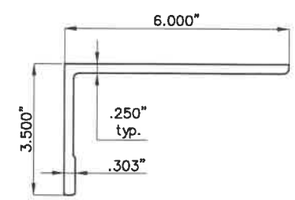

(61A) HEAD ANCHOR RIGHT HR-FP-25

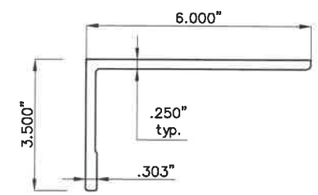

(62) HEAD ANCHOR CORNER LEFT HR-FP-22

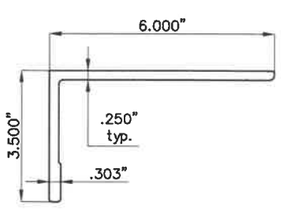

(63) HEAD ANCHOR CORNER RIGHT HR-FP-23

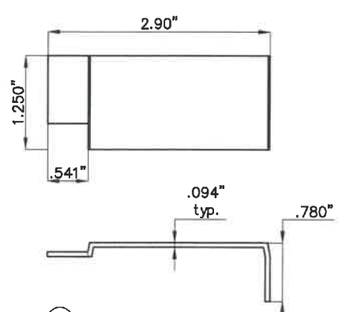

(66) RIGHT HAND JAMB END CAP HR-FP-2

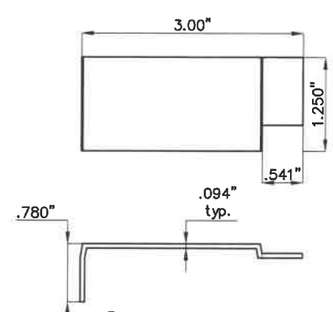

(67) LEFT HAND JAMB END CAP HR-FP-3

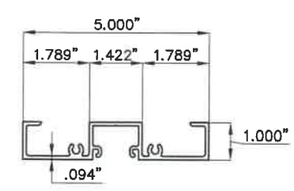

(68) SUB-FRAME HEADER D-231

FLORIDA BUILDING CODE (Non High Velocity Hurricane Zone)

HR-250DG CAPTURED DRY GLAZED CURTAIN WALL SYSTEM
LARGE MISSILE IMPACT LAMINATED GLASS

Oldcastle BuildingEnvelope™
803 Airport Rd - Terrell, TX 75160
www.OldcastleBE.com - Phone 800-869-4567

REV. No	DESCRIPTION	DATE	REV. No	DESCRIPTION	DATE
1	-	-	3	-	-
2	-	-	4	-	-

F.R.L DRAWN BY:
05/13/2021 DATE
21-068 DRAWING No
SHEET 3 OF 36

©2021 TILTECO, INC

TILTECO INC.
TILLIT TESTING & ENGINEERING COMPANY
6355 N.W. 36th. St., Ste. 305, VIRGINIA GARDENS, FL 33166
Phone : (305)871-1530 , Fax : (305)871-1531
e-mail: tilteco@aol.com
CA-0006719
WALTER A. TILLIT Jr. P.E.
FLORIDA Lic. # 44167

WALTER A. TILLIT JR. LICENSED No. 44167 STATE OF FLORIDA PROFESSIONAL ENGINEER

P.E. SEAL/SIGNATURE/DATE

BILL OF MATERIALS

ITEM No.	PART NUMBER	DESCRIPTION	DIMENSIONS	MATERIAL	MANUFACTURER	NOTES
1.	5607	EXTERIOR GLAZING GASKET	.401 X .836	EPDM	VARIES	70 DUROMETER
2.	5606	INTERIOR GLAZING GASKET	.260 X .896	EPDM	VARIES	70 DUROMETER
3.	DOW 995	STRUCTURAL SILICONE	FILL SPACE	SILICONE	DOWN CORNING	APPLY AT JOINT OF GASKET
4.	CW-187	EXTERIOR PERIMETER GASKET	.530 X .266	EPDM	VARIES	60 DUROMETER
5.	CW-6	THERMAL ISOLATOR	.625 X .296 X .078	EPDM	VARIES	
6.	CW-2101	SETTING BLOCK	.500 X .188 X 4" LONG	EPDM	VARIES	80-90 DUROMETER
7.	HR-FP-1	MULLION END CAPS	3.5 X 1.25 X .094	RIGID VINYL	VARIES	
8.	DOW 795	PERIMETER SEALANT	FILL SPACE	SILICONE	DOW CORNING	APPLY AT JOINT OF GASKET, 1/2" MINIMUM / 1" MAXIMUM
9.	FS-8	SPLINE ASSEMBLY SCREW	#14 X 1 HHSTS (STALGARD COATED BY ELCO)	STEEL	VARIES	
10.	FS-7	JAMB SCREW	#10 X 3/4" PFH TYPE B	STEEL	VARIES	(2) @ EA. HORIZ. 12" O.C. BETWEEN HORIZ. @ (2) PIECES JAMB
11.	FS-322	PRESSURE PLATE SCREW	#12-14 X 1" HWH (STALGARD COATED BY ELCO)	STEEL	VARIES	(1) AT EACH 12" O.C.
12.	CW-2	2 1/2" COVER	.515 X 2.5 X .050	6063-T6 ALUMINUM	OLDCASTLE BUILDINGENVELOPE	
13.	ZG-60	2 1/2" PRESSURE BAR	2.40 X .450 X .094	6063-T6 ALUMINUM	OLDCASTLE BUILDINGENVELOPE	SEE NOTE: #1
14.	HR-FP-20	MULLION SPLICE	2.16 X 4.96 X .125 X 6" LONG	6063-T6 ALUMINUM	OLDCASTLE BUILDINGENVELOPE	
15.	CW-1995	MULLION	2.50 X 6.26 X .094	6063-T6 ALUMINUM	OLDCASTLE BUILDINGENVELOPE	
16.	CW-1996	MULLION FILLER	.806 X 4.734 X .094	6063-T6 ALUMINUM	OLDCASTLE BUILDINGENVELOPE	
17.	CW-1997	HEAD/SILL	2.39 X 6.11 X .094	6063-T6 ALUMINUM	OLDCASTLE BUILDINGENVELOPE	
18.	CW-1998	HEAD/SILL TRIM	2.50 X 5.219 X .094	6063-T5 ALUMINUM	OLDCASTLE BUILDINGENVELOPE	
21.	CW-2002	TWO PIECE JAMB - MALE	1.203 X 5.25 X .094	6063-T6 ALUMINUM	OLDCASTLE BUILDINGENVELOPE	
22.	CW-2001	TWO PIECE JAMB - FEMALE	2.40 X 6.25 X .094	6063-T6 ALUMINUM	OLDCASTLE BUILDINGENVELOPE	
23.	CW-2003	CORNER PRESSURE PLATE	1.541 X 4.389 X .125	6063-T5 ALUMINUM	OLDCASTLE BUILDINGENVELOPE	
24.	CW-2004	CORNER FACE CAP	.546 X 3.347 X .062	6063-T5 ALUMINUM	OLDCASTLE BUILDINGENVELOPE	
25.	CW-2005	POCKET FILLER	.937 X 1.119 X .078	6063-T5 ALUMINUM	OLDCASTLE BUILDINGENVELOPE	
26.	CW-2018	CORNER MULLION - FEMALE	1.724 X 7.094 X .140	6063-T6 ALUMINUM	OLDCASTLE BUILDINGENVELOPE	
27.	CW-2019	CORNER MULLION - MALE	1.724 X 7.094 X .140	6063-T6 ALUMINUM	OLDCASTLE BUILDINGENVELOPE	
28.	CW-2020	CORNER MULLION FILLER	1.303 X 2.50 X .078	6063-T5 ALUMINUM	OLDCASTLE BUILDINGENVELOPE	
29.	CW-2021	CORNER SPLICE	1.064 X 6.314 X .125	6063-T6 ALUMINUM	OLDCASTLE BUILDINGENVELOPE	6" LONG
30.	D-226	DOOR JAMB	1.00 X 5.00 X .094	6063-T6 ALUMINUM	OLDCASTLE BUILDINGENVELOPE	
31.	FG-5172	DOOR HEADER-OFFSET ARM	2.50 X 4.98 X .135	6063-T6 ALUMINIUM	OLDCASTLE BUILDINGENVELOPE	
32.	FASTENER	STEEL REINFORCING ATTACHMENT BOLT	1/4-20 X 2" BOLT WITH WASHER AND NUT	STEEL	VARIES	JOIN 34, 52, 36 TO ALUM. MULLION
33.	**	BLUNDER PLUG (OPTIONAL)	1 1/4" DIA.	.	VARIES	ALT. PERIMETER ANCHOR ATTACHMENT @ JAMBS
34.	RS-25	REINFORCING STEEL	4 3/4" X 1 7/8" X 1/4" CHANNEL	A36 STEEL	VARIES	USED @ VERT. MULLION COATED ZINC RICH PRIMER
36.	**	REINFORCING STEEL BAR	3/4" X 4" STL. BAR	A36 STEEL	VARIES	USED @ VERT. MULLION COATED ZINC RICH PRIMER
37.	FG5000-PP-8	REINFORCING STEEL	4 1/2" X 1 1/4" X 1/4" CHANNEL	A36 STEEL	VARIES	USED AT VERTICAL FULL LENGTH
38.	HR-FP-13	BRAKE METAL SPLICE - MALE	.75 X 4.812 X .75 X .125 X 8" LONG	3030 ALUMINUM	VARIES	USED @ JAMBS 6" LONG
39.	HR-FP-14	BRAKE METAL SPLICE - FEMALE	.937 X 5.00 X 1.437 X .125 X 8" LONG	3030 ALUMINUM	VARIES	USED @ JAMBS 6" LONG
40.	FASTENER	ANCHOR BOLT	5/8-11 X 4 1/2" GRD 5 BOLT AND HEX NUT AND WASHER	STEEL	VARIES	ZINC COATED, PER ASTM B-633

**NO PART NUMBER ASSIGNED

NOTE #1: ALL VERTICALS PRESSURE PLATES SHALL BE CUT $\frac{1}{4}$" SHORT IN LENGTH TO ALLOW FOR WEEP SLOT

FLORIDA BUILDING CODE (Non High Velocity Hurricane Zone)

F.R.L
DRAWN BY:

05/13/2021
DATE

21-068
DRAWING No

SHEET 4 OF 36

HR-250DG CAPTURED DRY GLAZED CURTAIN WALL SYSTEM
LARGE MISSILE IMPACT LAMINATED GLASS

Oldcastle BuildingEnvelope™
803 Airport Rd - Terrell, TX 75160
www.OldcastleBE.com - Phone 800-869-4567

REV. No	DESCRIPTION	DATE	REV. No	DESCRIPTION	DATE
1	-	-	3	-	-
2	-	-	4	-	-

©2021 TILTECO, INC

TILTECO INC.
TILLIT TESTING & ENGINEERING COMPANY
6355 N.W. 36th. St., Ste. 305, VIRGINIA GARDENS, FL 33166
Phone : (305)871-1530 , Fax : (305)871-1531
e-mail: tilteco@aol.com
CA-0006719
WALTER A. TILLIT Jr. P.E.
FLORIDA Lic. # 44167

WALTER A. TILLIT JR.
LICENSE
No. 44167
STATE OF FLORIDA
PROFESSIONAL ENGINEER

P.E. SEAL/SIGNATURE/DATE

BILL OF MATERIALS (CONTINUED)

ITEM No.	PART NUMBER	DESCRIPTION	DIMENSIONS	MATERIAL	MANUFACTURER	NOTES
41.	**	STEEL DEADLOAD ANCHOR	4" X 6" X 5/16" X 5" LONG	A36 STEEL	VARIES	USED @ MULLIONS & JAMB. ZINC COATED, PER ASTM B-633
42.	**	SLIP PAD	4" X 4" X .063	NYLATRON	KORALATH	USED @ MID POINT ANCHORS
43.	FASTENER	JAMB ANCHOR BOLT	5/8"-11 X 1 1/2" BOLT	A36 STEEL	VARIES	ZINC COATED, PER ASTM B-633
44.	**	JAMB TAP PLATE	4" X 6" X 1/4"	A36 STEEL	VARIES	USED @ MID POINT ANCHORS
45.	FS-323	JAMB TAP PLATE SCREW	#12-14 X 1" HWH #3	STEEL	VARIES	
46.	**	STEEL DEADLOAD ANCHOR @ CORNER	4" X 8" X 1/4" X 5" LONG	A36 STEEL	VARIES	USED @ 90° CORNER. ZINC COATED, PER ASTM B-633
47.	HR-FP-7	90 DEG MULLION END CAP	3.437 X 1.25 X .094	RIGID VINYL	OLDCASTLE BUILDINGENVELOPE	TOP & BOTTOM OF MULLION
48.	HR-FP-11	WATER DIVERTER	0.875 X 1.061 X 0.875 X .062	VINYL	VARIES	0.75" LONG. SEE NOTE #2 BELOW
49.	SM-5601	JOINT SEALANT TAPE	.125 X .500 X VARIES	BUTYL	SCHNEE-MOREHEAD	USED @ END OF INTERM HORIZONTALS
50.	HR-FP-15	HEAD ANCHOR SLEEVE	2 3/16" X 4 15/16" X X 2 1/2" LONG	6063-T6 ALUMINUM	VARIES	
51.	HR-FP-17	HEAD ANCHOR SLEEVE CORNER	2 3/16" X 6 3/16" X 3" LONG	6063-T6 ALUMINUM	VARIES	USED @ JAMBS
52.	**	STEEL REINFORCING	3/8" X 4" STL. BAR	A36 STEEL	VARIES	ZINC COATED, PER ASTM B-633
53.	HR-FP-16	JAMB HEAD ANCHOR SLEEVE	2 3/16" X 5 5/16" X 5 1/8" LONG	6063-T6 ALUMINUM	OLDCASTLE BUILDINGENVELOPE	USED @ JAMBS
54.	CW-2097	HEAVY MULLION	2.50 X 6.26 X .125	6063-T6 ALUMINUM	OLDCASTLE BUILDINGENVELOPE	
55.	CW-2117	OPEN BACK HORIZONTAL	2.39 X 5.11 X .094	6063-T6 ALUMINUM	VISTAWALL	
60.	FASTENER	STEEL REINFORCING ATTACHMENT BOLT	1/4-20 X 3 1/2" BOLT WITH WASHER AND NUT SAE GRADE 5	STEEL	VARIES	THROUGH-BOLT @ (55) HORIZONTALS ZINC COATED, PER ASTM B-633
61.	HR-FP-24	HEAD ANCHOR LEFT	3 1/2" x 6" x 4 1/4" LONG	6063-T6 ALUMINUM	OLDCASTLE BUILDINGENVELOPE	
61A	HR-FP-25	HEAD ANCHOR RIGHT	3 1/2" x 6" x 4 1/4" LONG	6063-T6 ALUMINUM	OLDCASTLE BUILDINGENVELOPE	
62.	HR-FP-22	HEAD ANCHOR CORNER LEFT	2.147" X 6.314" X .125"	6063-T6 ALUMINUM	OLDCASTLE BUILDINGENVELOPE	
63.	HR-FP-23	HEAD ANCHOR CORNER RIGHT	2.147" X 6.314" X .25"	6063-T6 ALUMINUM	OLDCASTLE BUILDINGENVELOPE	
66.	HR-FP-2	RIGHT HAND JAMB END CAP	2.90 X 1.25 X .094	RIGID VINYL	VARIES	SEE NOTE # 2 BELOW
67.	HR-FP-3	LEFT HAND JAMB END CAP	2.90 X 1.25 X .094	RIGID VINYL	VARIES	SEE NOTE # 2 BELOW
68.	D-231	SUB-FRAME HEADER	1.00 X 5.00 X .094	6063-T6 ALUMINUM	OLDCASTLE BUILDINGENVELOPE	
69.	FASTENER	PERIMETER ANCHOR	1/4" TAPCON	STEEL	VARIES	

**NO PART NUMBER ASSIGNED

NOTE #2-BEAD OF DOW CORNING 995 SILICONE SHALL BE APPLIED TO FRAME SURFACE BEFORE PART IS INSTALLED

FLORIDA BUILDING CODE (Non High Velocity Hurricane Zone)

HR-250DG CAPTURED DRY GLAZED CURTAIN WALL SYSTEM
LARGE MISSILE IMPACT LAMINATED GLASS

F.R.L
DRAWN BY:

05/13/2021
DATE

21-068
DRAWING No

SHEET 5 OF 36

Oldcastle BuildingEnvelope™
803 Airport Rd - Terrell, TX 75160
www.OldcastleBE.com - Phone 800-869-4567

REV. No	DESCRIPTION	DATE	REV. No	DESCRIPTION	DATE
1	-	-	3	-	-
2	-	-	4	-	-

©2021 TILTECO, INC

TILTECO INC.
TILLIT TESTING & ENGINEERING COMPANY
6355 N.W. 36th. St., Ste. 305, VIRGINIA GARDENS, FL. 33166
Phone : (305)871-1530 , Fax : (305)871-1531
e-mail: tilteco@aol.com
CA-0006719
WALTER A. TILLIT Jr. P.E.
FLORIDA Lic. # 44167

P.E. SEAL/SIGNATURE/DATE

WALTER A. TILLIT JR. LICENSE No. 44167 STATE OF FLORIDA PROFESSIONAL ENGINEER

ISOMETRIC ELEVATION FOR HR-250 DG IMPACT RESISTANT CAPTURED CURTAIN WALL SYSTEM

N.T.S.

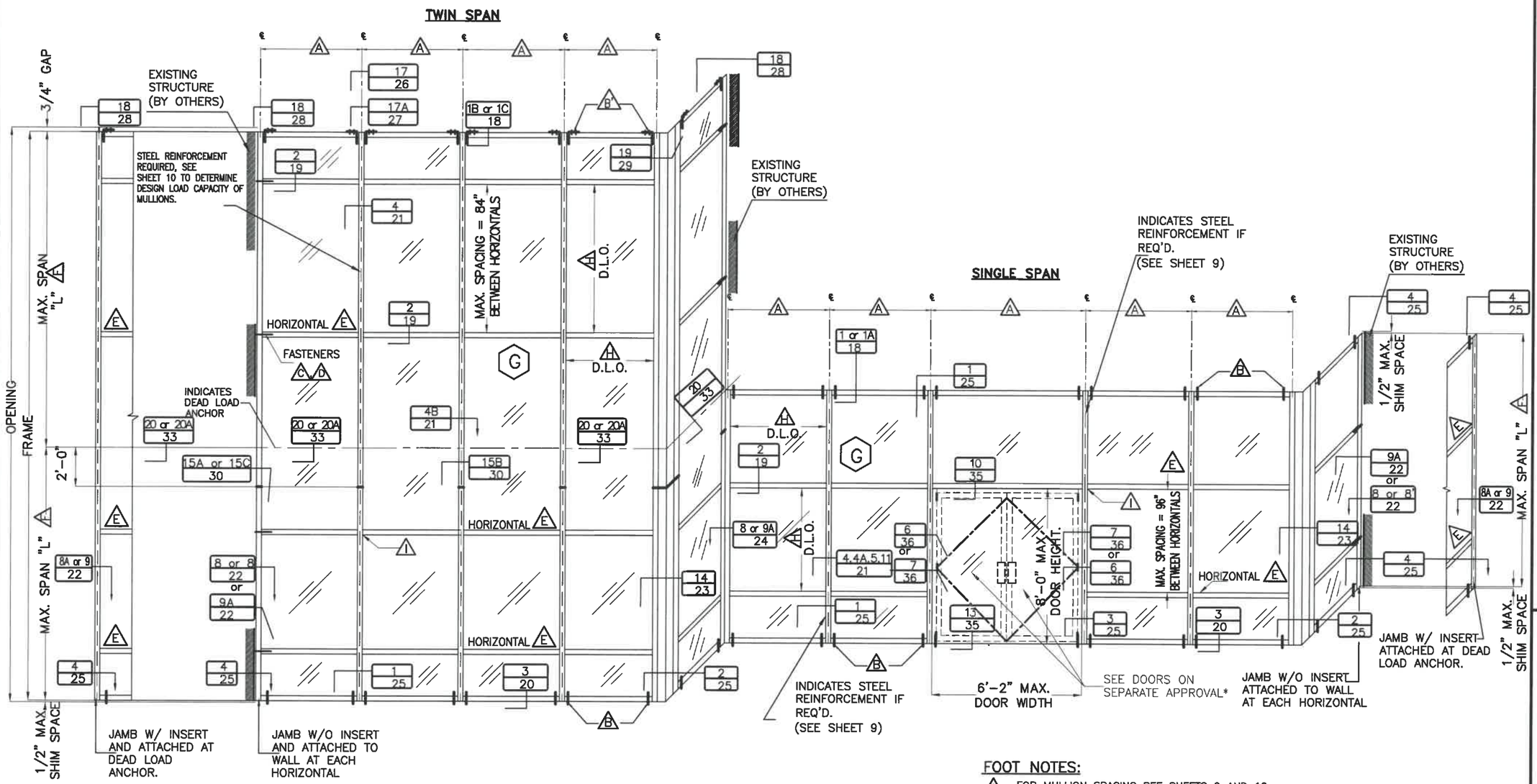

* WHEN INSTALLING A DOOR IN THIS SYSTEM, PANELS ADJACENT TO DOOR MUST BE GLAZED WITH SAFETY GLASS, PER GLASS TYPE G7T.

FOOT NOTES:

- (A) FOR MULLION SPACING SEE SHEETS 9 AND 10.
- (B) FOR HEAD (AT SINGLE SPAN CASE) AND SILL (AT SINGLE AND TWIN SPAN CASES), FASTENERS QUANTITY, TYPES AND SPECS SEE SHEET 12.
- (B') FOR HEAD (AT TWIN SPAN), FASTENERS QUANTITY, TYPES AND SPECS SEE SHEET 13.
- (C) FOR JAMB FASTENERS QUANTITY, TYPES AND SPECS SEE SHEETS 14 THRU 17.
- (D) SEE SHEETS 14 THRU 17 FOR MAXIMUM A.S.D. DESIGN PRESSURE RATING FOR JAMBS CONNECTED TO EXISTING STRUCTURE.
- (E) USE OF HORIZONTALS (SEE SECTION 2/19 AND 2A/19) DESIGN LOADS FOR LIMITATIONS.
- (F) FOR MAXIMUM MULLION SPAN SEE SHEETS 9 AND 10.
- (G) FOR GLAZING DETAILS AND GLASS SCHEDULE SEE SHEET 7.
- (H) FOR MAXIMUM D.L.O. SEE SCHEDULE ON SHEET 8.
- (I) SEE SEALING DETAILS ON SHEET 20A

FLORIDA BUILDING CODE (Non High Velocity Hurricane Zone)

HR-250DG CAPTURED DRY GLAZED CURTAIN WALL SYSTEM
LARGE MISSILE IMPACT LAMINATED GLASS

Oldcastle BuildingEnvelope™
803 Airport Rd - Terrell, TX 75160
www.OldcastleBE.com - Phone 800-869-4567

REV. No	DESCRIPTION	DATE	REV. No	DESCRIPTION	DATE
1	-	-	3	-	-
2	-	-	4	-	-

F.R.L. DRAWN BY:
05/13/2021 DATE
21-068 DRAWING No
SHEET 6 OF 36

©2021 TILTECO, INC

TILTECO INC.
TILLIT TESTING & ENGINEERING COMPANY
6355 N.W. 36th. St., Ste. 305, VIRGINIA GARDENS, FL 33166
Phone : (305)871-1530 , Fax : (305)871-1531
e-mail: tilteco@aol.com
CA-0006719
WALTER A. TILLIT Jr. P.E.
FLORIDA Lic. # 44167

P.E. SEAL/SIGNATURE/DATE

WALTER A. TILLIT JR. LICENSE No. 44167 STATE OF FLORIDA PROFESSIONAL ENGINEER

TYPICAL GLAZING DETAIL

* USE 13/16" MIN. GLASS BITE AT CORNER MULLION LOCATIONS (SEE SHEETS 25 AND 32)

SCALE 1/8" = 1"

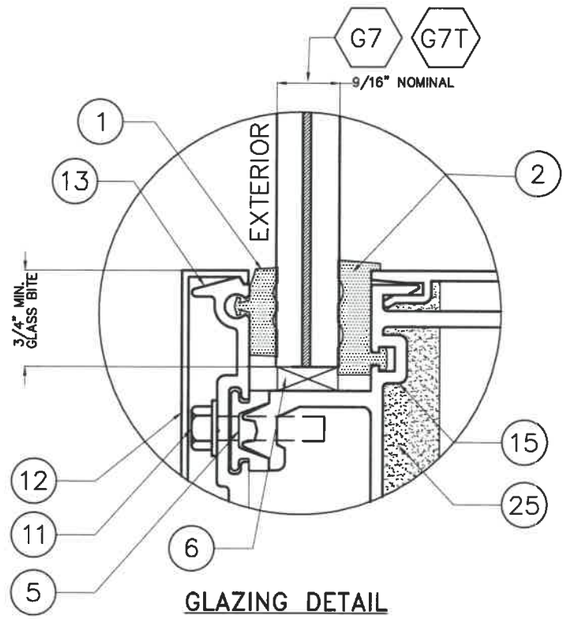

GLAZING DETAIL

GLASS SCHEDULE

GLASS LABEL	GLASS COMPOSITION	MANUFACTURER NAME	MAX. D.L.O.	MISSILE TYPE
G7	9/16" NOMINAL OVERALL THICKNESS LAMINATED GLASS CONSISTING OF EXTERIOR (2) 1/4" H.S.GLASS AND .090" SGP INTERLAYER	KURARAY	SEE SCHEDULE ON SHEET 8	LARGE MISSILE IMPACT
G7T	9/16" NOMINAL OVERALL THICKNESS LAMINATED GLASS CONSISTING OF EXTERIOR (2) 1/4" TEMPERED GLASS AND .090" SGP INTERLAYER	KURARAY	SEE SCHEDULE ON SHEET 8	LARGE MISSILE IMPACT

FLORIDA BUILDING CODE (Non High Velocity Hurricane Zone)

HR-250DG CAPTURED DRY GLAZED CURTAIN WALL SYSTEM
LARGE MISSILE IMPACT LAMINATED GLASS

Oldcastle BuildingEnvelope™
803 Airport Rd - Terrell, TX 75160
www.OldcastleBE.com - Phone 800-869-4567

REV. No	DESCRIPTION	DATE	REV. No	DESCRIPTION	DATE
1	-	-	3	-	-
2	-	-	4	-	-

F.R.L. DRAWN BY:

05/13/2021 DATE

21-068 DRAWING No

SHEET 7 OF 36

©2021 TILTECO, INC

TILTECO INC.
TILLIT TESTING & ENGINEERING COMPANY
6355 N.W. 36th. St. Ste. 305, VIRGINIA GARDENS, FL 33166
Phone : (305)971-1530, Fax : (305)971-1531
e-mail: tilteco@aol.com
CA-0006719
WALTER A. TILLIT Jr., P.E.
FLORIDA Lic. # 44167

P.E. SEAL/SIGNATURE/DATE

WALTER A. TILLIT JR. LICENSE No. 44167 STATE OF FLORIDA PROFESSIONAL ENGINEER

MAXIMUM FRAME WIDTH "a" AND FRAME LENGTH "b" VERSUS A.S.D. DESIGN PRESSURE RATING (psf) SCHEDULE *

GLASS TYPE G7 & G7T		
DIMENSION "a" *	DIMENSION "b" *	MAXIMUM A.S.D.DESIGN PRESSURE RATING(psf)
24"	from 24" to 101"	±70.0
30"	from 30" to 101"	±70.0
36"	from 36" to 101"	±70.0
42"	from 42" to 101"	±70.0
48"	from 48" to 101"	±70.0
54"	from 54" to 101"	±70.0
57.5"	from 57.5" to 101"	±70.0
60"	from 66" to 101"	±70.0
62.5"	from 72" to 101"	±70.0

* DETERMINATION OF MAXIMUM DAY LIGHT OPENING (D.L.O.) AT EACH END OF GLASS GIVEN "a" & "b"

SIDE	MAX. DAY LIGHT OPENING	
	(D.L.O.) Formula at Standard and Jamb mullions	(D.L.O.) Formula at head, sill and horizontal frames
MAX. D.L.O. (a) (SHORT SIDE)	"a"−5.00"	
MAX. D.L.O. (b) (LONG SIDE)	−	"b"−5.00"

DIMENSIONS LEGEND **

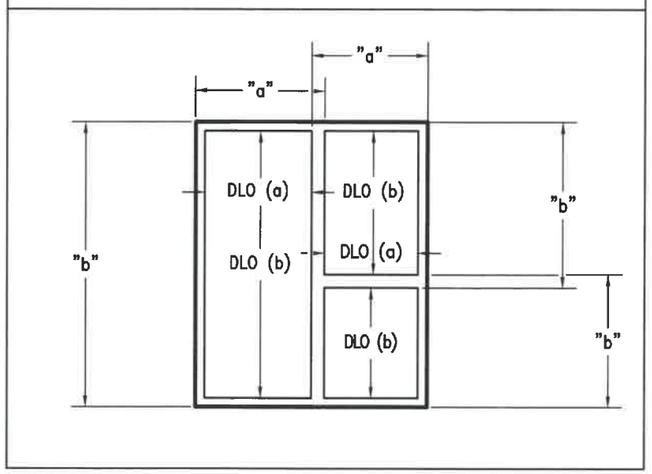

** SIDE "a" IS ALWAYS EQUAL OR SHORTER THAN "b".
"a", "b" MAY BE ORIENTED IN ANY DIRECTION.

FLORIDA BUILDING CODE (Non High Velocity Hurricane Zone)

HR-250DG CAPTURED DRY GLAZED CURTAIN WALL SYSTEM
LARGE MISSILE IMPACT LAMINATED GLASS

Oldcastle BuildingEnvelope™
803 Airport Rd - Terrell, TX 75160
www.OldcastleBE.com - Phone 800-869-4567

REV. No	DESCRIPTION	DATE	REV. No	DESCRIPTION	DATE
1	-	-	3	-	-
2	-	-	4	-	-

F.R.L
DRAWN BY:

05/13/2021
DATE

21-068
DRAWING No

SHEET 8 OF 36

©2021 TILTECO, INC

TILTECO INC.
TILLIT TESTING & ENGINEERING COMPANY
6355 N.W. 36th. St., Ste. 305, VIRGINIA GARDENS, FL 33166
Phone : (305)871-1530 , Fax : (305)871-1531
e-mail: tilteco@aol.com
CA-0006719
WALTER A. TILLIT Jr. P.E.
FLORIDA Lic. # 44167

WALTER A. TILLIT JR. LICENSE No. 44167 STATE OF FLORIDA PROFESSIONAL ENGINEER

P.E. SEAL/SIGNATURE/DATE

HR-250DG SINGLE SPAN MULLION

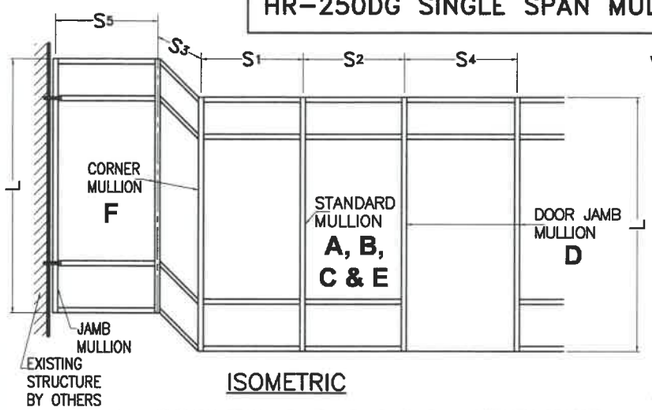

ISOMETRIC

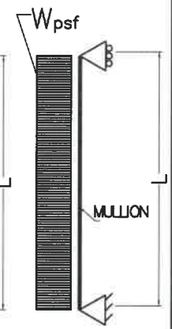

SIDE VIEW

L = MULLION SPAN ; S1, S2, S3, S4 & S5 = MULLION SPACING

EFFECTIVE SPACING $b = \frac{S_1 + S_2}{2}$ (FOR STANDARD MULLION)

EFFECTIVE SPACING $b = \frac{S_1 + S_3}{2}$ (FOR CORNER MULLION)

EFFECTIVE SPACING $b = \frac{S_2 + S_4}{2}$ (FOR DOOR JAMB MULLION)

CASE DEFINITIONS

CASE 1 : SINGLE SPAN UNREINFORCED STANDARD MULLION A (SEE DET. 5/21)

CASE 2 : SINGLE SPAN REINFORCED STANDARD MULLION B FULL HEIGHT. (SEE DET. 4/21)

CASE 3 : SINGLE SPAN HEAVILY REINFORCED STANDARD MULLION C FULL HEIGHT. (SEE DET. 4A/21)

CASE 4 : SINGLE SPAN REINFORCED DOOR JAMB MULLION D FULL HEIGHT. (SEE DET. 7/36)

CASE 5 : SINGLE SPAN UNREINFORCED STANDARD HEAVY MULLION E (SEE DET. 11/21)

CASE 6 : SINGLE SPAN REINFORCED CORNER MULLION F FULL HEIGHT. (SEE DET. 14/23)

MAXIMUM A.S.D. DESIGN PRESSURE RATING FOR STANDARD, DOOR JAMB & CORNER MULLIONS*

MAXIMUM MULLION SPAN "L"(FT) SCHEDULE FOR A GIVEN A.S.D. DESIGN PRESSURE RATING (psf) AND A GIVEN MULLION EFFECTIVE SPACING "b"

MAXIMUM A.S.D. DESIGN PRESSURE RATING (psf)	EFFECTIVE SPACING "b" (ft-in)	SINGLE SPAN MULLIONS CASE 1 MULLION: A "L" (ft-in)	CASE 2 MULLION: B "L" (ft-in)	CASE 3 MULLION: C "L" (ft-in)	CASE 4 MULLION: D "L" (ft-in)	CASE 5 MULLION: E "L" (ft-in)	CASE 6 MULLION: F "L" (ft-in)
60.0	3 '- 6 "	10 '- 0 "	12 '- 6 "	12 '- 6 "	12 '- 6 "	10 '- 0 "	12 '- 6 "
	4 '- 0 "	10 '- 0 "	12 '- 6 "	12 '- 6 "	12 '- 6 "	10 '- 0 "	12 '- 6 "
	4 '- 6 "	9 '- 8 "	12 '- 6 "	12 '- 6 "	12 '- 6 "	10 '- 0 "	12 '- 6 "
	5 '- 0 "	8 '- 8 "	12 '- 6 "	12 '- 6 "	12 '- 6 "	10 '- 0 "	12 '- 6 "
	5 '- 6 "				12 '- 6 "		
	6 '- 0 "				12 '- 6 "		
65.0	3 '- 6 "	10 '- 0 "	12 '- 6 "	12 '- 6 "	12 '- 6 "	10 '- 0 "	12 '- 6 "
	4 '- 0 "	10 '- 0 "	12 '- 6 "	12 '- 6 "	12 '- 6 "	10 '- 0 "	12 '- 6 "
	4 '- 6 "	8 '- 11 "	12 '- 6 "	12 '- 6 "	12 '- 6 "	10 '- 0 "	12 '- 6 "
	5 '- 0 "	8 '- 0 "	12 '- 6 "	12 '- 6 "	12 '- 6 "	10 '- 0 "	12 '- 6 "
	5 '- 6 "				12 '- 6 "		
	6 '- 0 "				12 '- 6 "		
70.0	3 '- 6 "	-	12 '- 6 "	12 '- 6 "	12 '- 6 "	10 '- 0 "	12 '- 6 "
	4 '- 0 "	-	12 '- 6 "	12 '- 6 "	12 '- 6 "	10 '- 0 "	12 '- 6 "
	4 '- 6 "	-	12 '- 6 "	12 '- 6 "	12 '- 6 "	10 '- 0 "	12 '- 6 "
	5 '- 0 "	-	12 '- 6 "	12 '- 6 "	12 '- 6 "	10 '- 0 "	12 '- 6 "
	5 '- 6 "	-			12 '- 6 "		
	6 '- 0 "	-			12 '- 6 "		

* MAXIMUM A.S.D. DESIGN PRESSURE RATING FOR STANDARD, DOOR JAMB, & CORNER MULLION WILL AUTOMATICALLY QUALIFY A.S.D. DESIGN PRESSURE RATINGS FOR JAMBS FOR ANY GIVEN MULLION SPACING.
MAXIMUM JAMB SPAN (DISTANCE BETWEEN ANCHORAGE POINTS) IS 96", AND JAMB ANCHORAGE SHALL BE PERFORMED AT HORIZONTAL RAIL LOCATIONS (EXCEPT AT EXPANSION HORIZONTAL RAILS).

A CASE:1 LIGHT MULLION (15) + (16)

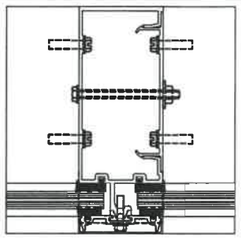

B CASE:2 LIGHT MULLION (15) + (16) W/ STEEL CHANNEL (34)

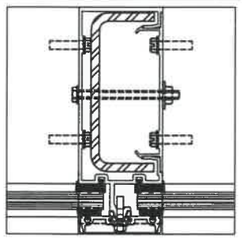

C CASE:3 LIGHT MULLION (15) + (16) W/ STEEL CHANNEL (34) & 3/8"x4" STEEL BAR (52)

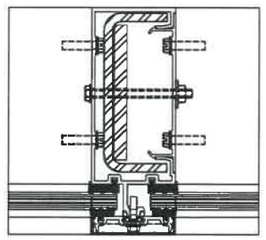

D CASE:4 LIGHT MULLION (15) + (16) W/ STEEL CHANNEL (34) & 3/4"x4" STEEL BAR (36)

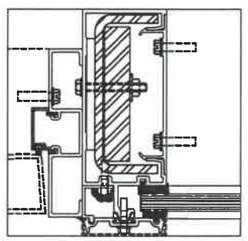

E CASE:5 HEAVY MULLION (54) + (16)

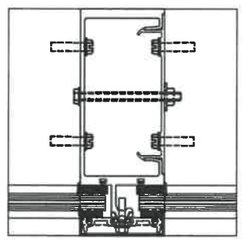

F CASE:6 CORNER MULLION (26) + (27) W/ STEEL CHANNEL (37)

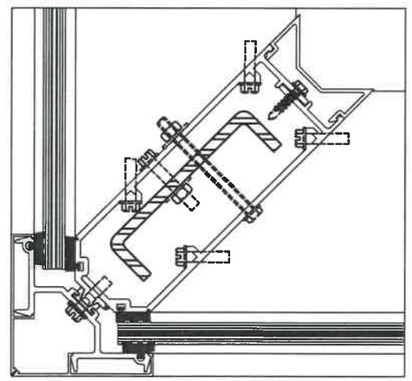

FLORIDA BUILDING CODE (Non High Velocity Hurricane Zone)

F.R.L. DRAWN BY:

05/13/2021 DATE

21-068 DRAWING No

SHEET 9 OF 36

HR-250DG CAPTURED DRY GLAZED CURTAIN WALL SYSTEM LARGE MISSILE IMPACT LAMINATED GLASS

Oldcastle BuildingEnvelope™
803 Airport Rd - Terrell, TX 75160
www.OldcastleBE.com - Phone 800-869-4567

REV. No	DESCRIPTION	DATE	REV. No	DESCRIPTION	DATE
1	-	-	3	-	-
2	-	-	4	-	-

©2021 TILTECO, INC

TILTECO INC.
TILLIT TESTING & ENGINEERING COMPANY
6355 N.W. 36th. St., Ste. 305, VIRGINA GARDENS, FL 33166
Phone : (305)871-1530 , Fax : (305)871-1531
e-mail: tilteco@aol.com
CA-0006719
WALTER A. TILLIT Jr. P.E.
FLORIDA Lic. # 44167

WALTER A. TILLIT JR. LICENSE No. 44167 STATE OF FLORIDA PROFESSIONAL ENGINEER

P.E. SEAL/SIGNATURE/DATE

HR-250DG TWIN SPAN MULLION

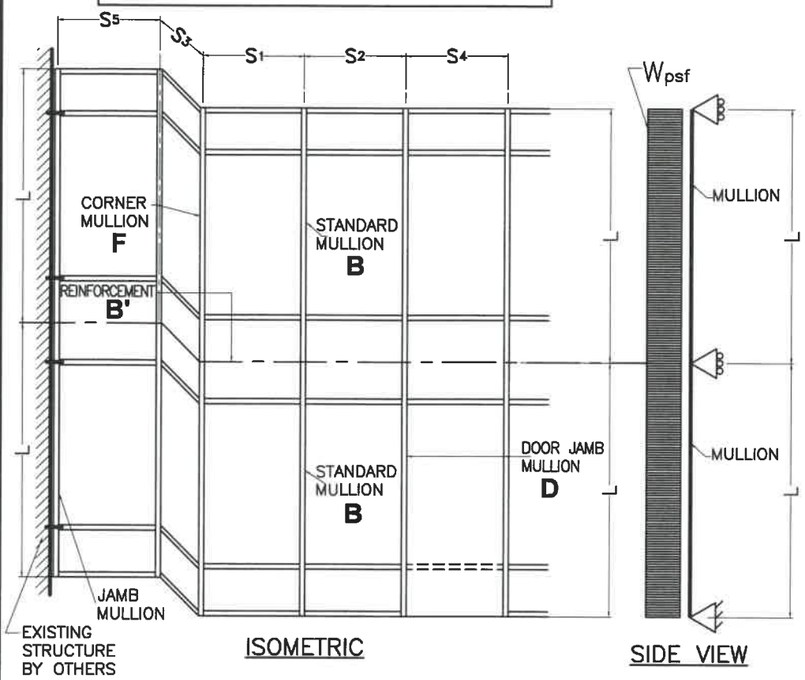

ISOMETRIC

SIDE VIEW

CASE DEFINITIONS

CASE 7 : TWIN SPAN REINFORCED STANDARD MULLION B FULL HEIGHT. (SEE DET. 4/21) W/ REQUIRED 76" LONG ADDITIONAL REINFORCEMENT B' AT DEAD AND WIND LOAD ANCHOR LOCATION SEE SHEET 11.

CASE 8 : TWIN SPAN REINFORCED CORNER MULLION F FULL HEIGHT. (SEE DET. 14/23)

CASE 9 : REINFORCED DOOR JAMB MULLION D FULL HEIGHT. (SEE DET. 7/36)

* MAXIMUM A.S.D. DESIGN PRESSURE RATING FOR STANDARD, DOOR JAMB, & CORNER MULLION WILL AUTOMATICALLY QUALIFY A.S.D. DESIGN PRESSURE RATINGS FOR JAMBS FOR ANY GIVEN MULLION SPACING. MAXIMUM JAMB SPAN (DISTANCE BETWEEN ANCHORAGE POINTS) IS 84", AND JAMB ANCHORAGE SHALL BE PERFORMED AT HORIZONTAL LOCATIONS.

L = MULLION SPAN ; S1, S2, S3, S4 & S5 = MULLION SPACING

EFFECTIVE SPACING $b = \frac{S_1 + S_2}{2}$ (FOR STANDARD MULLION)

EFFECTIVE SPACING $b = \frac{S_1 + S_3}{2}$ (FOR CORNER MULLION)

EFFECTIVE SPACING $b = \frac{S_2 + S_4}{2}$ (FOR DOOR JAMB MULLION)

MAXIMUM A.S.D. DESIGN PRESSURE RATING FOR STANDARD, DOOR JAMB & CORNER MULLIONS *

MAXIMUM MULLION SPAN "L"(FT) SCHEDULE FOR A GIVEN A.S.D. DESIGN PRESSURE RATING (psf) AND A GIVEN MULLION EFFECTIVE SPACING "b"

MAXIMUM A.S.D DESIGN PRESSURE RATING (psf)	EFFECTIVE SPACING "b" (ft-in)	TWIN SPAN MULLIONS CASE 7 MULLION B "L" (ft-in)	CASE 8 MULLION F "L" (ft-in)	CASE 9 ◊ MULLION D "L" (ft-in)
60.0	3 '- 6 "	12 '- 6 "	12 '- 6 "	12 '- 6 "
	4 '- 0 "	12 '- 6 "	12 '- 6 "	12 '- 6 "
	4 '- 6 "	12 '- 6 "	12 '- 6 "	12 '- 6 "
	5 '- 0 "	12 '- 6 "	12 '- 6 "	12 '- 6 "
	5 '- 6 "			12 '- 6 "
65.0	3 '- 6 "	12 '- 6 "	12 '- 6 "	12 '- 6 "
	4 '- 0 "	12 '- 6 "	12 '- 6 "	12 '- 6 "
	4 '- 6 "	12 '- 6 "	12 '- 6 "	12 '- 6 "
	5 '- 0 "	12 '- 6 "	12 '- 6 "	12 '- 6 "
	5 '- 6 "			12 '- 6 "
70.0	3 '- 6 "	12 '- 6 "	12 '- 6 "	12 '- 6 "
	4 '- 0 "	12 '- 6 "	12 '- 6 "	12 '- 6 "
	4 '- 6 "	12 '- 6 "	12 '- 6 "	12 '- 6 "
	5 '- 0 "	12 '- 6 "	12 '- 6 "	12 '- 6 "
	5 '- 6 "			12 '- 6 "

B — CASE:7 LIGHT MULLION (15) + (16) W/ STEEL CHANNEL (34)

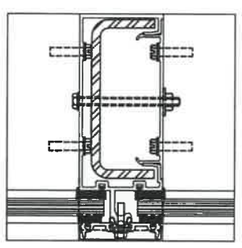

REINFORCEMENT B' — CASE:7' (AT DEAD & WIND LOAD ANCHOR LOCATION) FOR B W/ 3/4"x4" STEEL BAR (36)

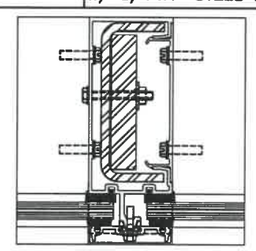

F — CASE:8 CORNER MULLION (26) + (27) W/ STEEL CHANNEL (37)

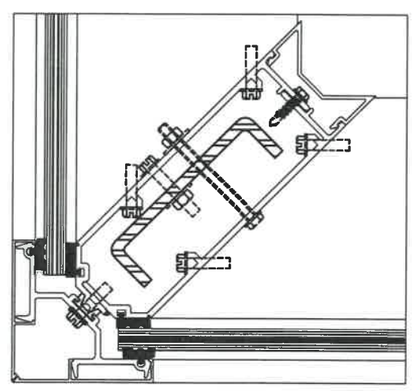

D — CASE:9 ◊ LIGHT MULLION (15) + (16) W/ STEEL CHANNEL (34) & 3/4"x4" STEEL BAR (36)

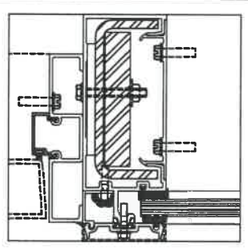

◊ THIS MULLION SHALL BE USED FULL HEIGHT, i.e. ON BOTH SPANS OF THE TWIN SPAN CONDITION.

FLORIDA BUILDING CODE (Non High Velocity Hurricane Zone)

HR-250DG CAPTURED DRY GLAZED CURTAIN WALL SYSTEM
LARGE MISSILE IMPACT LAMINATED GLASS

F.R.L DRAWN BY: | 05/13/2021 DATE | 21-068 DRAWING No | SHEET 10 OF 36

Oldcastle BuildingEnvelope™
803 Airport Rd - Terrell, TX 75160
www.OldcastleBE.com - Phone 800-869-4567

REV. No	DESCRIPTION	DATE	REV. No	DESCRIPTION	DATE
1	-	-	3	-	-
2	-	-	4	-	-

©2021 TILTECO, INC

TILTECO INC.
TILLIT TESTING & ENGINEERING COMPANY
6355 N.W. 36th. St., Ste. 305, VIRGINIA GARDENS, FL 33166
Phone : (305)871-1530 . Fax : (305)871-1531
e-mail: tilteco@aol.com
CA-0006719
WALTER A. TILLIT Jr. P.E.
FLORIDA Lic. # 44167

WALTER A. TILLIT JR. LICENSE No. 44167 STATE OF FLORIDA PROFESSIONAL ENGINEER

P.E. SEAL/SIGNATURE/DATE

OPTIONS FOR TWIN SPAN STANDARD AND CORNER MULLIONS INSTALLATION FOR HR-250DG CURTAIN WALL SYSTEM

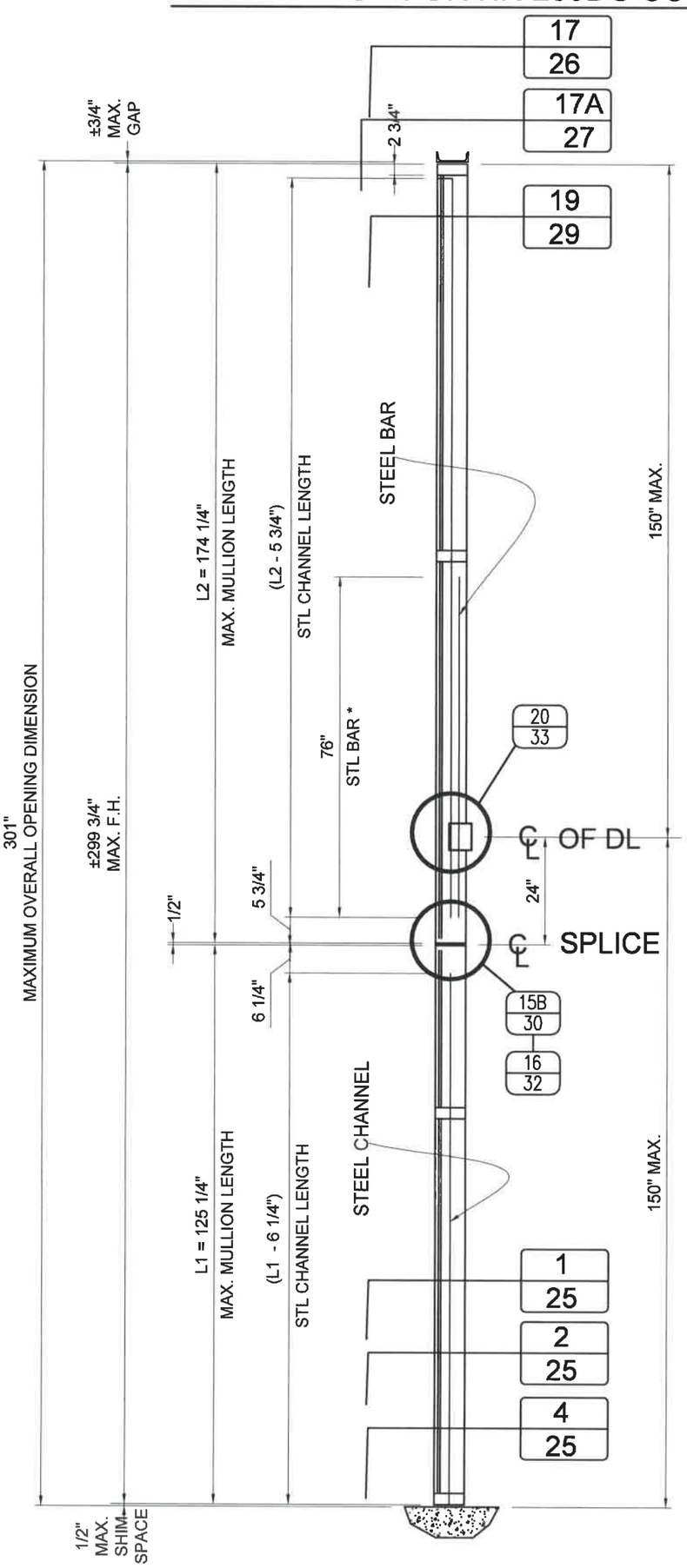

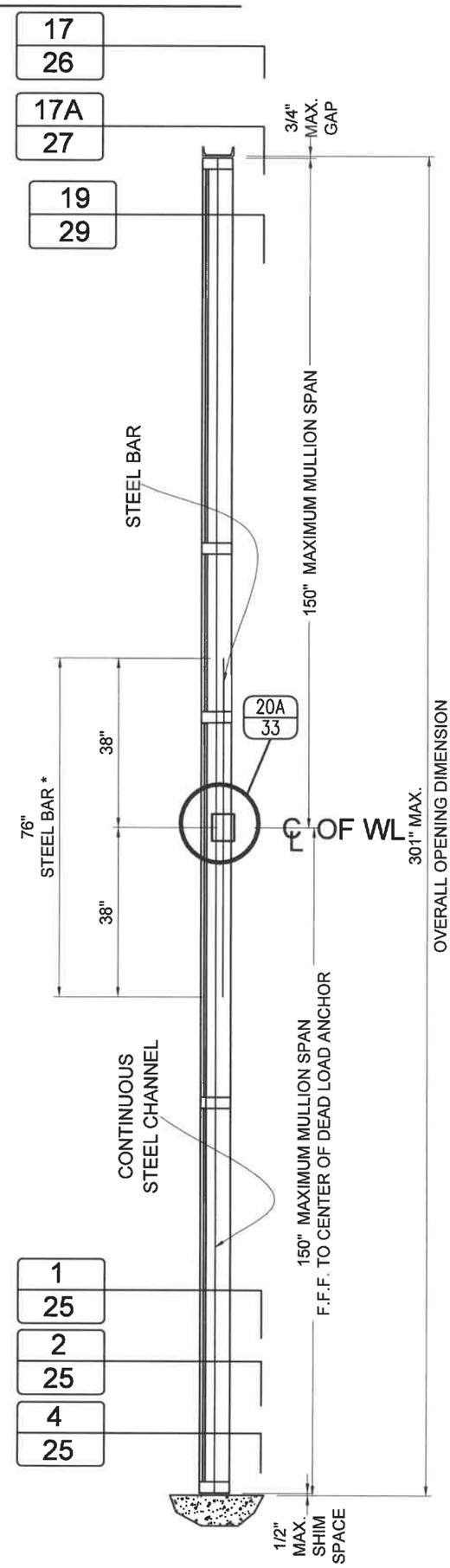

OPTION # 1
MULLION W/ SPLICE

OPTION # 2:
CONTINUOUS MULLION W/O SPLICE

* STEEL BAR NOT REQUIRED AT CORNER MULLION

WALTER A. TILLIT JR. LICENSE No. 44167 STATE OF FLORIDA PROFESSIONAL ENGINEER

5/14/2021

P.E. SEAL/SIGNATURE/DATE

FLORIDA BUILDING CODE (Non High Velocity Hurricane Zone)

©2021 TILTECO, INC

TILTECO INC.
TILLIT TESTING & ENGINEERING COMPANY
6355 N.W. 36th. St., Ste. 305, VIRGINIA GARDENS, FL 33166
Phone : (305)871-1530 . Fax : (305)871-1531
e-mail: tilteco@aol.com
CA-0000719
WALTER A. TILLIT Jr. P.E.
FLORIDA Lic. # 44167

HR-250DG CAPTURED DRY GLAZED CURTAIN WALL SYSTEM
LARGE MISSILE IMPACT LAMINATED GLASS

Oldcastle BuildingEnvelope™
803 Airport Rd - Terrell, TX 75160
www.OldcastleBE.com - Phone 800-869-4567

REV. No	DESCRIPTION	DATE	REV. No	DESCRIPTION	DATE
1	–	–	3	–	–
2	–	–	4	–	–

F.R.L
DRAWN BY:

05/13/2021
DATE

21-068
DRAWING No

MAXIMUM A.S.D. DESIGN PRESSURE RATING FOR SINGLE SPAN (HEAD & SILL) & TWIN SPAN (SILL ONLY) MULLION CONNECTIONS (SEE ALSO SHEET 13)

SINGLE SPAN MULLION:		HEAD & SILL CONNECTION *			
MAXIMUM MULLION SPAN	EFFECTIVE SPACING	MAXIMUM A.S.D. DESIGN PRESSURE RATING (psf)			
		POURED CONCRETE (Min. f'c = 3ksi) SUBSTRATE			1/4" Min. THK ASTM A-36 STEEL SUBSTRATE
		FASTENERS TYPES			FASTENERS
"L" (ft-in)	"b" (ft-in)	A	B	C	D
8'-5" MAX. 12'-6"	3'-6"	70.0	70.0	70.0	70.0
	4'-0"	70.0	70.0	70.0	70.0
	4'-6"	70.0	70.0	70.0	70.0
	5'-0"	70.0	70.0	70.0	70.0
	5'-6"	70.0	70.0	70.0	70.0
	6'-0"	70.0	70.0	70.0	70.0

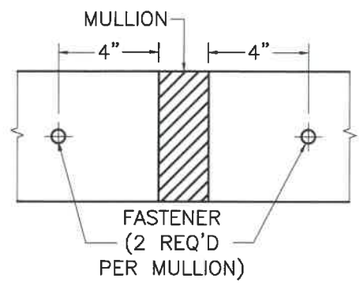

EXTERIOR

SCHEMATIC CONNECTION DETAIL *

* SEE CONNECTION DETAILS ON SHEETS 18 & 25 FOR FASTENERS LOCATION AT MULLION.

TWIN SPAN MULLION:		SILL CONNECTION *			
MAXIMUM MULLION SPAN	EFFECTIVE SPACING	MAXIMUM A.S.D. DESIGN PRESSURE RATING (psf)			
		POURED CONCRETE (Min. f'c = 3ksi) SUBSTRATE			1/4" Min. THK ASTM A-36 STEEL SUBSTRATE
		FASTENERS TYPES			FASTENERS
"L" (ft-in)	"b" (ft-in)	A	B	C	D
8'-5" MAX. 12'-6"	3'-6"	70.0	70.0	70.0	70.0
	4'-0"	70.0	70.0	70.0	70.0
	4'-6"	70.0	70.0	70.0	70.0
	5'-0"	70.0	70.0	70.0	70.0
	5'-6"	70.0	70.0	70.0	70.0
	6'-0"	70.0	70.0	70.0	70.0

B FASTENERS TYPES REQUIREMENTS

A - 1/2"Ø HILTI KWIK BOLT TZ ANCHOR W/ 3 1/4" Min. EMBEDMENT INTO 8" Min. THICK POURED CONCRETE (Min. f'c = 3 ksi) BEYOND ANY FINISH MATERIAL, W/ 6" MIN. EDGE DISTANCE.

B - 1/2"Ø HILTI KWIK BOLT TZ ANCHOR W/ 3 1/4" Min. EMBEDMENT INTO 6" Min. THICK POURED CONCRETE (Min. f'c = 3 ksi) BEYOND ANY FINISH MATERIAL, W/ 7 1/2" MIN. EDGE DISTANCE.

C - 1/2"Ø HILTI HUS-H SCREW ANCHOR W/ 3" Min. EMBEDMENT INTO 4" Min. THICK POURED CONCRETE (Min. f'c = 3 ksi) BEYOND ANY FINISH MATERIAL, W/ 3 3/4" MIN. EDGE DISTANCE.

D - 1/2"Ø-13 TYPE "F" GRADE 5 BOLT TO 1/4" MIN. THK. ASTM A-36 STEEL W/ 1" Min. EDGE DISTANCE OR 1/2"Ø -13 SAE GALVANIZED STEEL GRADE 5 HHB THRU BOLT W/ NUT & LOCK WASHER TO 1/4" Min. THK. ASTM A-36 STEEL W/ 1" MIN. EDGE DISTANCE.

FLORIDA BUILDING CODE (Non High Velocity Hurricane Zone)

HR-250DG CAPTURED DRY GLAZED CURTAIN WALL SYSTEM
LARGE MISSILE IMPACT LAMINATED GLASS

F.R.L
DRAWN BY:

05/13/2021
DATE

21-068
DRAWING No

SHEET 12 OF 36

Oldcastle BuildingEnvelope™
803 Airport Rd - Terrell, TX 75160
www.OldcastleBE.com - Phone 800-869-4567

REV. No	DESCRIPTION	DATE	REV. No	DESCRIPTION	DATE
1	-	-	3	-	-
2	-	-	4	-	-

©2021 TILTECO, INC

TILTECO INC.
TILLIT TESTING & ENGINEERING COMPANY
6355 N.W. 36th. St., Ste. 305, VIRGINIA GARDENS, FL 33166
Phone : (305)871-1530 . Fax : (305)871-1531
e-mail: tilteco@aol.com
CA-0006719
WALTER A. TILLIT Jr. P.E.
FLORIDA Lic. # 44167

WALTER A. TILLIT JR. LICENSE No. 44167 STATE OF FLORIDA PROFESSIONAL ENGINEER

P.E. SEAL/SIGNATURE/DATE

MAXIMUM A.S.D. DESIGN PRESSURE RATING FOR TWIN SPAN MULLION HEAD ANCHOR CONNECTIONS

61

TWIN SPAN MULLION : HEAD CONNECTION *

W/ (1) 6"x 3 1/2" x 4 1/4" LONG ANCHOR #61

TYPE 1 **		MAXIMUM A.S.D. DESIGN PRESSURE RATING (psf)			
MAXIMUM MULLION SPAN	EFFECTIVE SPACING	POURED CONCRETE (Min. f'c = 3ksi) SUBSTRATE			1/4" Min. THK ASTM A-36 STEEL SUBSTRATE
		FASTENERS TYPES			FASTENERS
"L" (ft-in)	"b" (ft-in)	A	B	C	D
	3'-6"	66.3	69.2	58.9	70.0
	4'-0"	58.0	60.5	51.5	70.0
8'-5"	4'-6"	51.6	53.8	45.8	70.0
	5'-0"	46.4	48.4	41.2	70.0
	5'-6"	42.2	44.0	37.5	70.0
	3'-6"	65.6	68.5	58.3	70.0
	4'-0"	57.4	59.9	51.0	70.0
8'-6"	4'-6"	51.1	53.3	45.4	70.0
	5'-0"	46.0	48.0	40.8	70.0
	5'-6"	41.8	43.6	37.1	70.0
	3'-6"	62.0	64.7	55.1	70.0
	4'-0"	54.3	56.6	48.2	70.0
9'-0"	4'-6"	48.2	50.3	42.8	70.0
	5'-0"	43.4	45.3	38.6	70.0
	5'-6"	39.5	41.2	35.1	70.0
	3'-6"	58.7	61.3	52.2	70.0
	4'-0"	51.4	53.6	45.7	70.0
9'-6"	4'-6"	45.7	47.7	40.6	70.0
	5'-0"	41.1	42.9	36.5	70.0
	5'-6"	37.4	39.0	33.2	70.0
	3'-6"	55.8	58.2	49.6	70.0
	4'-0"	48.8	50.9	43.4	70.0
10'-0"	4'-6"	43.4	45.3	38.6	70.0
	5'-0"	39.1	40.8	34.7	70.0
	5'-6"	35.5	37.1	31.6	70.0
	3'-6"	53.1	55.5	47.2	70.0
	4'-0"	46.5	48.5	41.3	70.0
10'-6"	4'-6"	41.3	43.1	36.7	70.0
	5'-0"	37.2	38.8	33.1	70.0
	5'-6"	33.8	35.3	30.0	70.0
	3'-6"	50.7	52.9	45.1	70.0
	4'-0"	44.4	46.3	39.4	70.0
11'-0"	4'-6"	39.5	41.2	35.1	70.0
	5'-0"	35.5	37.1	31.6	70.0
	5'-6"	32.3	33.7	28.7	70.0
	3'-6"	48.5	50.6	43.1	70.0
	4'-0"	42.5	44.3	37.7	70.0
11'-6"	4'-6"	37.7	39.4	33.5	70.0
	5'-0"	34.0	35.4	30.2	70.0
	5'-6"	30.9	32.2	27.4	70.0
	3'-6"	46.5	48.5	41.3	70.0
	4'-0"	40.7	42.5	36.2	70.0
12'-0"	4'-6"	36.2	37.7	32.1	70.0
	5'-0"	32.6	34.0	28.9	70.0
	5'-6"	29.6	30.9	26.3	70.0
	3'-6"	44.6	46.6	39.7	70.0
	4'-0"	39.1	40.8	34.7	70.0
12'-6"	4'-6"	34.7	36.2	30.9	70.0
	5'-0"	31.2	32.6	27.8	70.0
	5'-6"	28.4	29.6	25.2	70.0

61

TWIN SPAN MULLION : HEAD CONNECTION *

W/ (1) 6"x 3 1/2" x 4 1/4" LONG ANCHOR #61

TYPE 2 **		MAXIMUM A.S.D. DESIGN PRESSURE RATING (psf)			
MAXIMUM MULLION SPAN	EFFECTIVE SPACING	POURED CONCRETE (Min. f'c = 3ksi) SUBSTRATE			1/4" Min. THK ASTM A-36 STEEL SUBSTRATE
		FASTENERS TYPES			FASTENERS
"L" (ft-in)	"b" (ft-in)	A	B	C	D
	3'-6"	59.2	61.8	52.6	70.0
	4'-0"	51.8	54.0	46.0	70.0
8'-5"	4'-6"	46.0	48.0	40.9	70.0
	5'-0"	41.4	43.2	36.8	70.0
	5'-6"	37.7	39.3	33.5	70.0
	3'-6"	58.6	61.2	52.1	70.0
	4'-0"	51.3	53.5	45.6	70.0
8'-6"	4'-6"	45.6	47.6	40.5	70.0
	5'-0"	41.0	42.8	36.5	70.0
	5'-6"	37.3	38.9	33.1	70.0
	3'-6"	55.4	57.8	49.2	70.0
	4'-0"	48.4	50.5	43.0	70.0
9'-0"	4'-6"	43.1	44.9	38.3	70.0
	5'-0"	38.8	40.4	34.4	70.0
	5'-6"	35.2	36.8	31.3	70.0
	3'-6"	52.4	54.7	46.6	70.0
	4'-0"	45.9	47.9	40.8	70.0
9'-6"	4'-6"	40.8	42.6	36.2	70.0
	5'-0"	36.7	38.3	32.6	70.0
	5'-6"	33.4	34.8	29.7	70.0
	3'-6"	49.8	52.0	44.3	70.0
	4'-0"	43.6	45.5	38.7	70.0
10'-0"	4'-6"	38.8	40.4	34.4	70.0
	5'-0"	34.9	36.4	31.0	70.0
	5'-6"	31.7	33.1	28.2	70.0
	3'-6"	47.4	49.5	42.2	70.0
	4'-0"	41.5	43.3	36.9	70.0
10'-6"	4'-6"	36.9	38.5	32.8	70.0
	5'-0"	33.2	34.7	29.5	70.0
	5'-6"	30.2	31.5	26.8	70.0
	3'-6"	45.3	47.3	40.2	70.0
	4'-0"	39.6	41.4	35.2	70.0
11'-0"	4'-6"	35.2	36.8	31.3	70.0
	5'-0"	31.7	33.1	28.2	70.0
	5'-6"	28.8	30.1	25.6	70.0
	3'-6"	43.3	45.2	38.5	70.0
	4'-0"	37.9	39.6	33.7	70.0
11'-6"	4'-6"	33.7	35.2	29.9	70.0
	5'-0"	30.3	31.6	26.9	70.0
	5'-6"	27.6	28.8	24.5	70.0
	3'-6"	41.5	43.3	36.9	70.0
	4'-0"	36.3	37.9	32.3	70.0
12'-0"	4'-6"	32.3	33.7	28.7	70.0
	5'-0"	29.1	30.3	25.8	70.0
	5'-6"	26.4	27.6	23.5	70.0
	3'-6"	39.9	41.6	35.4	70.0
	4'-0"	34.9	36.4	31.0	70.0
12'-6"	4'-6"	31.0	32.3	27.5	70.0
	5'-0"	27.9	29.1	24.8	70.0
	5'-6"	25.4	26.5	22.5	70.0

61A

61

TWIN SPAN MULLION (INCLUDING CORNER MULLION): HEAD CONNECTION *

W/ (2) 6"x 3 1/2" x 4 1/4" LONG ANCHOR #61

TYPES 1 & 2 **		MAXIMUM A.S.D. DESIGN PRESSURE RATING (			
MAXIMUM MULLION SPAN	EFFECTIVE SPACING	POURED CONCRETE (Min. f'c = 3ksi) SUBSTRATE			1/4" Min. THK ASTM A-36 STEEL SUBSTRATE
		FASTENERS TYPES			FASTENERS
"L" (ft-in)	"b" (ft-in)	A	B	C	D
	3'-6"	70.0	70.0	70.0	70.0
	4'-0"	70.0	70.0	70.0	70.0
8'-5"	4'-6"	70.0	70.0	70.0	70.0
MAX. 12'-6"	5'-0"	70.0	70.0	70.0	70.0
	5'-6"	70.0	70.0	70.0	70.0

*SEE CONNECTION DETAILS ON SHEETS 26 & 27 FOR FASTENERS LOCATIONS AT MULLION. △

**

TYPE 1 CONNECTION:

CORRESPONDS TO CONTINUOUS TWIN SPAN MULLION INSTALLATIONS.

TYPE 2 CONNECTION:

CORRESPONDS TO SPLICED TWIN SPAN MULLION INSTALLATIONS.

Ⓑ FASTENERS TYPES REQUIREMENTS

A - 1/2"Ø HILTI KWIK BOLT TZ ANCHOR W/ 3 1/4" Min. EMBEDMENT INTO 8" Min. THICK POURED CONCRETE (Min. f'c = 3 ksi) BEYOND ANY FINISH MATERIAL, W/ 6" MIN. EDGE DISTANCE.

B - 1/2"Ø HILTI KWIK BOLT TZ ANCHOR W/ 3 1/4" Min. EMBEDMENT INTO 6" Min. THICK POURED CONCRETE (Min. f'c = 3 ksi) BEYOND ANY FINISH MATERIAL, W/ 7 1/2" MIN. EDGE DISTANCE.

C - 1/2"Ø HILTI HUS-H SCREW ANCHOR W/ 3" Min. EMBEDMENT INTO 4" Min. THICK POURED CONCRETE (Min. f'c = 3 ksi) BEYOND ANY FINISH MATERIAL, W/ 3 3/4" MIN. EDGE DISTANCE.

D - 1/2"Ø-13 TYPE "F" GRADE 5 BOLT TO 1/4" MIN. THK. ASTM A-36 STEEL W/ 1" MIN. EDGE DISTANCE OR 1/2"Ø -13 SAE GALVANIZED STEEL GRADE 5 HHB THRU BOLT W/ NUT & LOCK WASHER TO 1/4" MIN. THK. ASTM A-36 STEEL W/ 1" MIN. EDGE DISTANCE.

△ MAX. PRESSURE RATING FOR JAMB CONNECTION @ HEAD W/ ANCHOR (61) IS ± 70 psf FOR SINGLE SPAN CURTAIN WALL AND ±70 psf FOR TWIN SPAN CURTAIN WALL, VALID FOR ALL EFFECTIVE WIDTHS. SEE CONNECTION DETAILS ON SHEET 28 FOR FASTENERS LOCATION AT JAMB.

FLORIDA BUILDING CODE (Non High Velocity Hurricane Zone)

HR-250DG CAPTURED DRY GLAZED CURTAIN WALL SYSTEM
LARGE MISSILE IMPACT LAMINATED GLASS

F.R.L DRAWN BY: | 05/13/2021 DATE | 21-068 DRAWING No | SHEET 13 OF 36

Oldcastle BuildingEnvelope™
803 Airport Rd - Terrell, TX 75160
www.OldcastleBE.com - Phone 800-869-4567

REV. No	DESCRIPTION	DATE	REV. No	DESCRIPTION	DATE
1	-	-	3	-	-
2	-	-	4	-	-

©2021 TILTECO, INC

TILTECO INC.
TILLIT TESTING & ENGINEERING COMPANY
6355 N.W. 36th. St., Ste. 305, VIRGINIA GARDENS, FL 33166
Phone : (305)871-1530 , Fax : (305)871-1531
e-mail: tilteco@aol.com
CA-0006719
WALTER A. TILLIT Jr., P.E.
FLORIDA Lic. # 44167

P.E. SEAL/SIGNATURE/DATE

WALTER A. TILLIT JR. LICENSE No. 44167 STATE OF FLORIDA PROFESSIONAL ENGINEER

MAXIMUM A.S.D. DESIGN PRESSURE RATING FOR JAMBS AT SINGLE SPAN CURTAIN WALL FASTENED TO EXISTING STRUCTURE W/ 3/8"Ø FASTENERS (SEE ALSO SHEETS 15, 16 & 17)

OPTION #1 : 2 FASTENERS CONNECTION

MAXIMUM MULLION SPAN	EFFECTIVE SPACING b = S_5 /2	MAXIMUM A.S.D. DESIGN PRESSURE RATING (psf)					
		POURED CONCRETE (Min. f'c = 3ksi) SUBSTRATE			GROUT FILLED CONCRETE BLOCK SUBSTRATE		1/4" Min. THK ASTM A-36 STEEL SUBSTRATE
		FASTENER TYPES			FASTENER TYPES		FASTENER
"L" (ft-in)	"b" ft-in)	E	F	G	H	I	J
8'-5"	1'-9"	70.0	70.0	70.0	70.0	70.0	70.0
	2'-0"	70.0	70.0	70.0	70.0	70.0	70.0
	2'-3"	70.0	70.0	70.0	70.0	70.0	70.0
	2'-6"	70.0	70.0	70.0	70.0	70.0	70.0
	2'-9"	70.0	70.0	67.8	70.0	67.8	70.0
	3'-3"	70.0	70.0	57.4	70.0	57.4	70.0
8'-6"	1'-9"	70.0	70.0	70.0	70.0	70.0	70.0
	2'-0"	70.0	70.0	70.0	70.0	70.0	70.0
	2'-3"	70.0	70.0	70.0	70.0	70.0	70.0
	2'-6"	70.0	70.0	70.0	70.0	70.0	70.0
	2'-9"	70.0	70.0	67.2	70.0	67.2	70.0
	3'-3"	69.7	69.7	56.8	69.7	56.8	70.0
9'-0"	1'-9"	70.0	70.0	70.0	70.0	70.0	70.0
	2'-0"	70.0	70.0	70.0	70.0	70.0	70.0
	2'-3"	70.0	70.0	70.0	70.0	70.0	70.0
	2'-6"	70.0	70.0	70.0	70.0	69.8	70.0
	2'-9"	70.0	70.0	70.0	70.0	63.4	70.0
	3'-3"	65.8	65.8	53.7	65.8	53.7	70.0
9'-6"	1'-9"	70.0	70.0	70.0	70.0	70.0	70.0
	2'-0"	70.0	70.0	70.0	70.0	70.0	70.0
	2'-3"	70.0	70.0	70.0	70.0	70.0	70.0
	2'-6"	70.0	70.0	66.1	70.0	66.1	70.0
	2'-9"	70.0	70.0	60.1	70.0	60.1	70.0
	3'-3"	62.3	62.3	50.9	62.3	50.9	70.0
10'-0"	1'-9"	70.0	70.0	70.0	70.0	70.0	70.0
	2'-0"	70.0	70.0	70.0	70.0	70.0	70.0
	2'-3"	70.0	70.0	70.0	70.0	69.8	70.0
	2'-6"	70.0	70.0	62.8	70.0	62.8	70.0
	2'-9"	70.0	70.0	57.1	70.0	57.1	70.0
	3'-3"	59.2	59.2	48.3	59.2	48.3	67.0
10'-6"	1'-9"	70.0	70.0	70.0	70.0	70.0	70.0
	2'-0"	70.0	70.0	70.0	70.0	70.0	70.0
	2'-3"	70.0	70.0	66.5	70.0	66.5	70.0
	2'-6"	70.0	70.0	59.8	70.0	59.8	70.0
	2'-9"	66.7	66.7	54.4	66.7	54.4	70.0
	3'-3"	56.4	56.4	46.0	56.4	46.0	63.9
11'-0"	1'-9"	70.0	70.0	70.0	70.0	70.0	70.0
	2'-0"	70.0	70.0	70.0	70.0	70.0	70.0
	2'-3"	70.0	70.0	63.4	70.0	63.4	70.0
	2'-6"	70.0	70.0	57.1	70.0	57.1	70.0
	2'-9"	63.6	63.6	51.9	63.6	51.9	70.0
	3'-3"	53.8	53.8	43.9	53.8	43.9	60.9
11'-6"	1'-9"	70.0	70.0	70.0	70.0	70.0	70.0
	2'-0"	70.0	70.0	70.0	70.0	68.3	70.0
	2'-3"	70.0	70.0	70.0	70.0	60.7	70.0
	2'-6"	66.9	66.9	54.6	66.9	54.6	70.0
	2'-9"	60.9	60.9	49.7	60.9	49.7	68.9
	3'-3"	51.5	51.5	42.0	51.5	42.0	58.3
12'-0"	1'-9"	70.0	70.0	70.0	70.0	70.0	70.0
	2'-0"	70.0	70.0	65.4	70.0	65.4	70.0
	2'-3"	70.0	70.0	58.2	70.0	58.2	70.0
	2'-6"	64.2	64.2	52.3	64.2	52.3	70.0
	2'-9"	58.3	58.3	47.6	58.3	47.6	66.0
	3'-3"	49.4	49.4	40.3	49.4	40.3	55.9
12'-6"	1'-9"	70.0	70.0	70.0	70.0	70.0	70.0
	2'-0"	70.0	70.0	62.8	70.0	62.8	70.0
	2'-3"	68.4	68.4	55.8	68.4	55.8	70.0
	2'-6"	61.6	61.6	50.2	61.6	50.2	69.7
	2'-9"	56.0	56.0	45.7	56.0	45.7	63.4
	3'-3"	47.4	47.4	38.7	47.4	38.7	53.6

OPTION #2 : 3 FASTENERS CONNECTION

MAXIMUM MULLION SPAN	EFFECTIVE SPACING b = S_5 /2	MAXIMUM A.S.D. DESIGN PRESSURE RATING (psf)					
		POURED CONCRETE (Min. f'c = 3ksi) SUBSTRATE			GROUT FILLED CONCRETE BLOCK SUBSTRATE		1/4" Min. THK ASTM A-36 STEEL SUBSTRATE
		FASTENER TYPES			FASTENER TYPES		FASTENER
"L" (ft-in)	"b" ft-in)	E	F	G	H	I	J
8'-5"	1'-9"	70.0	70.0	70.0	70.0	70.0	70.0
	2'-0"	70.0	70.0	70.0	70.0	70.0	70.0
	2'-3"	70.0	70.0	70.0	70.0	70.0	70.0
	2'-6"	70.0	70.0	70.0	70.0	70.0	70.0
	2'-9"	70.0	70.0	70.0	70.0	70.0	70.0
	3'-3"	70.0	70.0	70.0	70.0	70.0	70.0
8'-6"	1'-9"	70.0	70.0	70.0	70.0	70.0	70.0
	2'-0"	70.0	70.0	70.0	70.0	70.0	70.0
	2'-3"	70.0	70.0	70.0	70.0	70.0	70.0
	2'-6"	70.0	70.0	70.0	70.0	70.0	70.0
	2'-9"	70.0	70.0	70.0	70.0	70.0	70.0
	3'-3"	70.0	70.0	70.0	70.0	70.0	70.0
9'-0"	1'-9"	70.0	70.0	70.0	70.0	70.0	70.0
	2'-0"	70.0	70.0	70.0	70.0	70.0	70.0
	2'-3"	70.0	70.0	70.0	70.0	70.0	70.0
	2'-6"	70.0	70.0	70.0	70.0	70.0	70.0
	2'-9"	70.0	70.0	70.0	70.0	70.0	70.0
	3'-3"	70.0	70.0	70.0	70.0	70.0	70.0
9'-6"	1'-9"	70.0	70.0	70.0	70.0	70.0	70.0
	2'-0"	70.0	70.0	70.0	70.0	70.0	70.0
	2'-3"	70.0	70.0	70.0	70.0	70.0	70.0
	2'-6"	70.0	70.0	70.0	70.0	70.0	70.0
	2'-9"	70.0	70.0	70.0	70.0	70.0	70.0
	3'-3"	70.0	70.0	70.0	70.0	70.0	70.0
10'-0"	1'-9"	70.0	70.0	70.0	70.0	70.0	70.0
	2'-0"	70.0	70.0	70.0	70.0	70.0	70.0
	2'-3"	70.0	70.0	70.0	70.0	70.0	70.0
	2'-6"	70.0	70.0	70.0	70.0	70.0	70.0
	2'-9"	70.0	70.0	70.0	70.0	70.0	70.0
	3'-3"	70.0	70.0	70.0	70.0	70.0	70.0
10'-6"	1'-9"	70.0	70.0	70.0	70.0	70.0	70.0
	2'-0"	70.0	70.0	70.0	70.0	70.0	70.0
	2'-3"	70.0	70.0	70.0	70.0	70.0	70.0
	2'-6"	70.0	70.0	70.0	70.0	70.0	70.0
	2'-9"	70.0	70.0	70.0	70.0	70.0	70.0
	3'-3"	70.0	70.0	70.0	70.0	69.0	70.0
11'-0"	1'-9"	70.0	70.0	70.0	70.0	70.0	70.0
	2'-0"	70.0	70.0	70.0	70.0	70.0	70.0
	2'-3"	70.0	70.0	70.0	70.0	70.0	70.0
	2'-6"	70.0	70.0	70.0	70.0	70.0	70.0
	2'-9"	70.0	70.0	70.0	70.0	70.0	70.0
	3'-3"	70.0	70.0	65.9	70.0	65.9	70.0
11'-6"	1'-9"	100.0	100.0	100.0	100.0	70.0	100.0
	2'-0"	70.0	70.0	70.0	70.0	70.0	70.0
	2'-3"	70.0	70.0	70.0	70.0	70.0	70.0
	2'-6"	70.0	70.0	70.0	70.0	70.0	70.0
	2'-9"	70.0	70.0	70.0	70.0	70.0	70.0
	3'-3"	70.0	70.0	63.0	70.0	63.0	70.0
12'-0"	1'-9"	100.0	100.0	100.0	100.0	70.0	100.0
	2'-0"	70.0	70.0	70.0	70.0	70.0	70.0
	2'-3"	70.0	70.0	70.0	70.0	70.0	70.0
	2'-6"	70.0	70.0	70.0	70.0	70.0	70.0
	2'-9"	70.0	70.0	70.0	70.0	70.0	70.0
	3'-3"	70.0	70.0	60.4	70.0	60.4	70.0
12'-6"	1'-9"	70.0	70.0	70.0	70.0	70.0	70.0
	2'-0"	70.0	70.0	70.0	70.0	70.0	70.0
	2'-3"	70.0	70.0	70.0	70.0	70.0	70.0
	2'-6"	70.0	70.0	70.0	70.0	70.0	70.0
	2'-9"	70.0	70.0	68.5	70.0	68.5	70.0
	3'-3"	70.0	70.0	58.0	70.0	58.0	70.0

OPTION #3 : 4 FASTENERS CONNECTION

MAXIMUM MULLION SPAN	EFFECTIVE SPACING b = S_5 /2	MAXIMUM A.S.D. DESIGN PRESSURE RATING (psf)					
		POURED CONCRETE (Min. f'c = 3ksi) SUBSTRATE			GROUT FILLED CONCRETE BLOCK SUBSTRATE		1/4" Min. THK ASTM A-36 STEEL SUBSTRATE
		FASTENER TYPES			FASTENER TYPES		FASTENER
"L" (ft-in)	"b" ft-in)	E	F	G	H	I	J
8'-5" MAX. 12'-5"	1'-9"	70.0	70.0	70.0	70.0	70.0	70.0
	2'-0"	70.0	70.0	70.0	70.0	70.0	70.0
	2'-3"	70.0	70.0	70.0	70.0	70.0	70.0
	2'-6"	70.0	70.0	70.0	70.0	70.0	70.0
	2'-9"	70.0	70.0	70.0	70.0	70.0	70.0
	3'-3"	70.0	70.0	70.0	70.0	70.0	70.0

OPTION # 1 (ELEVATION)
(2) FASTENERS CONNECTION

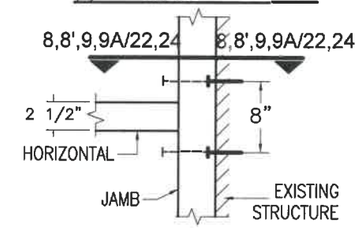

OPTION # 2 (ELEVATION)
(3) FASTENERS CONNECTION

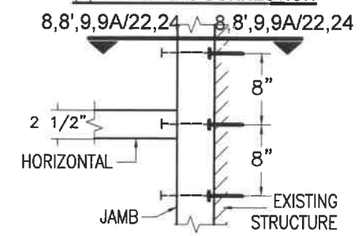

OPTION # 3 (ELEVATION)
(4) FASTENERS CONNECTION

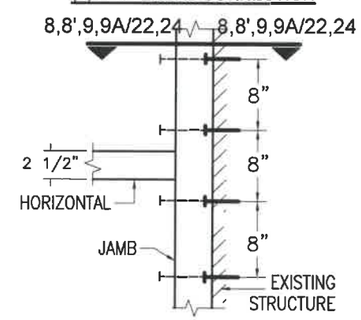

B FASTENER TYPES REQUIREMENTS:

E - 3/8"Ø HILTI KWIK BOLT TZ ANCHOR W/ 2" Min. EMBEDMENT INTO POURED CONCRETE (Min. f'c = 3 ksi) BEYOND ANY FINISH MATERIAL, W/ 4" MIN. EDGE DISTANCE.

F - 3/8"Ø HILTI KWIK BOLT 3 ANCHOR W/ 2 1/2" Min. EMBEDMENT INTO POURED CONCRETE (Min. f'c = 3 ksi) BEYOND ANY FINISH MATERIAL, W/ 4" MIN. EDGE DISTANCE.

G - 3/8"Ø HILTI HUS-H SCREW ANCHOR W/ 2 3/4" Min. EMBEDMENT INTO POURED CONCRETE (Min. f'c = 3 ksi) BEYOND ANY FINISH MATERIAL, W/ 3 3/4" MIN. EDGE DISTANCE.

H - 3/8"Ø HILTI KWIK BOLT 3 ANCHOR W/ 2 1/2" Min. EMBEDMENT INTO GROUT FILLED CONCRETE BLOCK BEYOND ANY FINISH MATERIAL, W/ 4" MIN. EDGE DISTANCE.

I - 3/8"Ø HILTI HUS-H SCREW ANCHOR W/ 3 1/4" Min. EMBEDMENT INTO GROUT FILLED CONCRETE BLOCK BEYOND ANY FINISH MATERIAL, W/ 4" MIN. EDGE DISTANCE.

J - 3/8"Ø-13 TYPE "F" GRADE 5 BOLT TO 1/4" MIN. THK. ASTM A-36 STEEL W/ 1" MIN. EDGE DISTANCE OR 3/8"Ø-13 SAE GRADE 5, GALVANIZED STEEL BOLT W/ LOCK WASHER & NUT TO 1/4" Min. THK. ASTM A-36 STEEL & MIN. E.D. = 3/4".

* SEE SHEET 9 FOR EFFECTIVE SPACING DEFINITION AT ISOMETRIC.

FLORIDA BUILDING CODE (Non High Velocity Hurricane Zone)

HR-250DG CAPTURED DRY GLAZED CURTAIN WALL SYSTEM
LARGE MISSILE IMPACT LAMINATED GLASS

F.R.L
DRAWN BY:

05/13/2021
DATE

21-068
DRAWING No

SHEET 14 OF 36

Oldcastle BuildingEnvelope™
803 Airport Rd - Terrell, TX 75160
www.OldcastleBE.com - Phone 800-869-4567

REV. No	DESCRIPTION	DATE	REV. No	DESCRIPTION	DATE
1	-	-	3	-	-
2	-	-	4	-	-

©2021 TILTECO, INC

TILTECO INC.
TILLIT TESTING & ENGINEERING COMPANY
6355 N.W. 36th. St., Ste. 305, VIRGINIA GARDENS, FL 33166
Phone : (305)871-1531 , Fax : (305)871-1531
e-mail: tilteco@aol.com
CA-0006719
WALTER A. TILLIT Jr., P.E.
FLORIDA Lic. # 44167

P.E. SEAL/SIGNATURE/DATE

WALTER A. TILLIT JR. LICENSE No. 44167 STATE OF FLORIDA PROFESSIONAL ENGINEER

MAXIMUM A.S.D DESIGN PRESSURE RATING FOR JAMBS AT TWIN SPAN CURTAIN WALL FASTENED TO EXISTING STRUCTURE W/ 3/8"Ø FASTENERS (CONTINUED)

OPTION #1 : 2 FASTENERS CONNECTION

MAXIMUM MULLION SPAN	EFFECTIVE SPACING b = S_5/2 *	MAXIMUM A.S.D. DESIGN PRESSURE RATING (psf)					
		POURED CONCRETE (Min. fc = 3ksi) SUBSTRATE			GROUT FILLED CONCRETE BLOCK SUBSTRATE		1/4" Min. THK ASTM A-36 STEEL SUBSTRATE
		FASTENER TYPES			FASTENER TYPES		FASTENER
"L" (ft-in)	"b" (ft-in)	E	F	G	H	I	J
8'-5"	1'-9"	70.0	70.0	64.1	70.0	64.1	70.0
	2'-0"	68.7	68.7	56.1	68.7	56.1	70.0
	2'-3"	61.1	61.1	49.8	61.1	49.8	69.2
	2'-6"	55.0	55.0	44.9	55.0	44.9	62.3
	2'-9"	50.0	50.0	40.8	50.0	40.8	56.6
8'-6"	1'-9"	70.0	70.0	64.1	70.0	64.1	70.0
	2'-0"	68.7	68.7	56.1	68.7	56.1	70.0
	2'-3"	61.1	61.1	49.8	61.1	49.8	69.2
	2'-6"	55.0	55.0	44.9	55.0	44.9	62.3
	2'-9"	50.0	50.0	40.8	50.0	40.8	56.6
9'-0"	1'-9"	70.0	70.0	64.1	70.0	64.1	70.0
	2'-0"	68.7	68.7	56.1	68.7	56.1	70.0
	2'-3"	61.1	61.1	49.8	61.1	49.8	69.2
	2'-6"	55.0	55.0	44.9	55.0	44.9	62.3
	2'-9"	50.0	50.0	40.8	50.0	40.8	56.6
9'-6"	1'-9"	70.0	70.0	64.1	70.0	64.1	70.0
	2'-0"	68.7	68.7	56.1	68.7	56.1	70.0
	2'-3"	61.1	61.1	49.8	61.1	49.8	69.2
	2'-6"	55.0	55.0	44.9	55.0	44.9	62.3
	2'-9"	50.0	50.0	40.8	50.0	40.8	56.6
10'-0"	1'-9"	70.0	70.0	64.1	70.0	64.1	70.0
	2'-0"	68.7	68.7	56.1	68.7	56.1	70.0
	2'-3"	61.1	61.1	49.8	61.1	49.8	69.2
	2'-6"	55.0	55.0	44.9	55.0	44.9	62.3
	2'-9"	50.0	50.0	40.8	50.0	40.8	56.6
10'-6"	1'-9"	70.0	70.0	64.1	70.0	64.1	70.0
	2'-0"	68.7	68.7	56.1	68.7	56.1	70.0
	2'-3"	61.1	61.1	49.8	61.1	49.8	69.2
	2'-6"	55.0	55.0	44.9	55.0	44.9	62.3
	2'-9"	50.0	50.0	40.8	50.0	40.8	56.6
11'-0"	1'-9"	70.0	70.0	64.1	70.0	64.1	70.0
	2'-0"	68.7	68.7	56.1	68.7	56.1	70.0
	2'-3"	61.1	61.1	49.8	61.1	49.8	69.2
	2'-6"	55.0	55.0	44.9	55.0	44.9	62.3
	2'-9"	50.0	50.0	40.8	50.0	40.8	56.6
11'-6"	1'-9"	70.0	70.0	64.1	70.0	64.1	70.0
	2'-0"	68.7	68.7	56.1	68.7	56.1	70.0
	2'-3"	61.1	61.1	49.8	61.1	49.8	69.2
	2'-6"	55.0	55.0	44.9	55.0	44.9	62.3
	2'-9"	50.0	50.0	40.8	50.0	40.8	56.6
12'-0"	1'-9"	70.0	70.0	64.1	70.0	64.1	70.0
	2'-0"	68.7	68.7	56.1	68.7	56.1	70.0
	2'-3"	61.1	61.1	49.8	61.1	49.8	69.2
	2'-6"	55.0	55.0	44.9	55.0	44.9	62.3
	2'-9"	50.0	50.0	40.8	50.0	40.8	56.6
12'-6"	1'-9"	70.0	70.0	64.1	70.0	64.1	70.0
	2'-0"	68.7	68.7	56.1	68.7	56.1	70.0
	2'-3"	61.1	61.1	49.8	61.1	49.8	69.2
	2'-6"	55.0	55.0	44.9	55.0	44.9	62.3
	2'-9"	50.0	50.0	40.8	50.0	40.8	56.6

OPTION #2 : 3 FASTENERS CONNECTION

MAXIMUM MULLION SPAN	EFFECTIVE SPACING b = S_5/2 *	MAXIMUM A.S.D. DESIGN PRESSURE RATING (psf)					
		POURED CONCRETE (Min. fc = 3ksi) SUBSTRATE			GROUT FILLED CONCRETE BLOCK SUBSTRATE		1/4" Min. THK ASTM A-36 STEEL SUBSTRATE
		FASTENER TYPES			FASTENER TYPES		FASTENER
"L" (ft-in)	"b" (ft-in)	E	F	G	H	I	J
8'-5"	1'-9"	70.0	70.0	70.0	70.0	70.0	70.0
	2'-0"	70.0	70.0	70.0	70.0	70.0	70.0
	2'-3"	70.0	70.0	70.0	70.0	70.0	70.0
	2'-6"	70.0	70.0	67.3	70.0	67.3	70.0
	2'-9"	70.0	70.0	61.2	70.0	61.2	70.0
8'-6"	1'-9"	70.0	70.0	70.0	70.0	70.0	70.0
	2'-0"	70.0	70.0	70.0	70.0	70.0	70.0
	2'-3"	70.0	70.0	70.0	70.0	70.0	70.0
	2'-6"	70.0	70.0	67.3	70.0	67.3	70.0
	2'-9"	70.0	70.0	61.2	70.0	61.2	70.0
9'-0"	1'-9"	70.0	70.0	70.0	70.0	70.0	70.0
	2'-0"	70.0	70.0	70.0	70.0	70.0	70.0
	2'-3"	70.0	70.0	70.0	70.0	70.0	70.0
	2'-6"	70.0	70.0	67.3	70.0	67.3	70.0
	2'-9"	70.0	70.0	61.2	70.0	61.2	70.0
9'-6"	1'-9"	70.0	70.0	70.0	70.0	70.0	70.0
	2'-0"	70.0	70.0	70.0	70.0	70.0	70.0
	2'-3"	70.0	70.0	70.0	70.0	70.0	70.0
	2'-6"	70.0	70.0	67.3	70.0	67.3	70.0
	2'-9"	70.0	70.0	61.2	70.0	61.2	70.0
10'-0"	1'-9"	70.0	70.0	70.0	70.0	70.0	70.0
	2'-0"	70.0	70.0	70.0	70.0	70.0	70.0
	2'-3"	70.0	70.0	70.0	70.0	70.0	70.0
	2'-6"	70.0	70.0	67.3	70.0	67.3	70.0
	2'-9"	70.0	70.0	61.2	70.0	61.2	70.0
10'-6"	1'-9"	70.0	70.0	70.0	70.0	70.0	70.0
	2'-0"	70.0	70.0	70.0	70.0	70.0	70.0
	2'-3"	70.0	70.0	70.0	70.0	70.0	70.0
	2'-6"	70.0	70.0	67.3	70.0	67.3	70.0
	2'-9"	70.0	70.0	61.2	70.0	61.2	70.0
11'-0"	1'-9"	70.0	70.0	70.0	70.0	70.0	70.0
	2'-0"	70.0	70.0	70.0	70.0	70.0	70.0
	2'-3"	70.0	70.0	70.0	70.0	70.0	70.0
	2'-6"	70.0	70.0	67.3	70.0	67.3	70.0
	2'-9"	70.0	70.0	61.2	70.0	61.2	70.0
11'-6"	1'-9"	70.0	70.0	70.0	70.0	70.0	70.0
	2'-0"	70.0	70.0	70.0	70.0	70.0	70.0
	2'-3"	70.0	70.0	70.0	70.0	70.0	70.0
	2'-6"	70.0	70.0	67.3	70.0	67.3	70.0
	2'-9"	70.0	70.0	61.2	70.0	61.2	70.0
12'-0"	1'-9"	70.0	70.0	70.0	70.0	70.0	70.0
	2'-0"	70.0	70.0	70.0	70.0	70.0	70.0
	2'-3"	70.0	70.0	70.0	70.0	70.0	70.0
	2'-6"	70.0	70.0	67.3	70.0	67.3	70.0
	2'-9"	70.0	70.0	61.2	70.0	61.2	70.0
12'-6"	1'-9"	70.0	70.0	70.0	70.0	70.0	70.0
	2'-0"	70.0	70.0	70.0	70.0	70.0	70.0
	2'-3"	70.0	70.0	70.0	70.0	70.0	70.0
	2'-6"	70.0	70.0	67.3	70.0	67.3	70.0
	2'-9"	70.0	70.0	61.2	70.0	61.2	70.0

OPTION #3: 4 FASTENERS CONNECTION

MAXIMUM MULLION SPAN	EFFECTIVE SPACING b = S_5/2 *	MAXIMUM A.S.D. DESIGN PRESSURE RATING (psf)					
		POURED CONCRETE (Min. fc = 3ksi) SUBSTRATE			GROUT FILLED CONCRETE BLOCK SUBSTRATE		1/4" Min. THK ASTM A-36 STEEL SUBSTRATE
		FASTENER TYPES			FASTENER TYPES		FASTENER
"L" (ft-in)	"b" (ft-in)	E	F	G	H	I	J
8'-5" MAX. 12'-6"	1'-9"	70.0	70.0	70.0	70.0	70.0	70.0
	2'-0"	70.0	70.0	70.0	70.0	70.0	70.0
	2'-3"	70.0	70.0	70.0	70.0	70.0	70.0
	2'-6"	70.0	70.0	70.0	70.0	70.0	70.0
	2'-9"	70.0	70.0	70.0	70.0	70.0	70.0

* SEE SHEET 10 FOR EFFECTIVE SPACING DEFINITION AT ISOMETRIC.

OPTION # 1 (ELEVATION)
(2) FASTENERS CONNECTION

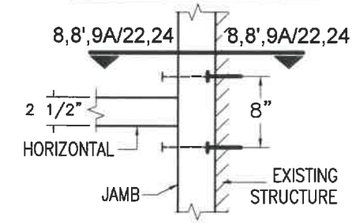

OPTION # 2 (ELEVATION)
(3) FASTENERS CONNECTION

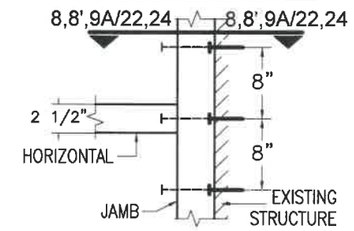

OPTION # 3 (ELEVATION)
(4) FASTENERS CONNECTION

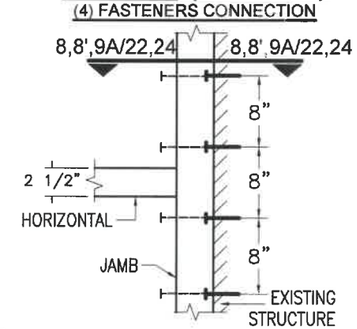

B FASTENER TYPES REQUIREMENTS:

E - 3/8"Ø HILTI KWIK BOLT TZ ANCHOR W/ 2" Min. EMBEDMENT INTO POURED CONCRETE (Min. f'c = 3 ksi) BEYOND ANY FINISH MATERIAL, W/ 4" MIN. EDGE DISTANCE.

F - 3/8"Ø HILTI KWIK BOLT 3 ANCHOR W/ 2 1/2" Min. EMBEDMENT INTO POURED CONCRETE (Min. f'c = 3 ksi) BEYOND ANY FINISH MATERIAL, W/ 4" MIN. EDGE DISTANCE.

G - 3/8"Ø HILTI HUS-H SCREW ANCHOR W/ 2 3/4" Min. EMBEDMENT INTO POURED CONCRETE (Min. f'c = 3 ksi) BEYOND ANY FINISH MATERIAL, W/ 3 3/4" MIN. EDGE DISTANCE.

H - 3/8"Ø HILTI KWIK BOLT 3 ANCHOR W/ 2 1/2" Min. EMBEDMENT INTO GROUT FILLED CONCRETE BLOCK BEYOND ANY FINISH MATERIAL, W/ 4" MIN. EDGE DISTANCE.

I - 3/8"Ø HILTI HUS-H SCREW ANCHOR W/ 3 1/4" Min. EMBEDMENT INTO GROUT FILLED CONCRETE BLOCK BEYOND ANY FINISH MATERIAL, W/ 4" MIN. EDGE DISTANCE.

J - 3/8"Ø-13 TYPE "F" GRADE 5 BOLT TO 1/4" MIN. THK. ASTM A-36 STEEL W/ 1" MIN. EDGE DISTANCE OR 3/8"Ø-13 SAE GRADE 5, GALVANIZED STEEL BOLT W/ LOCK WASHER & NUT TO 1/4" Min. THK. ASTM A-36 STEEL & MIN. E.D. = 3/4".

FLORIDA BUILDING CODE (Non High Velocity Hurricane Zone)

©2021 TILTECO, INC

TILTECO INC.
TILLIT TESTING & ENGINEERING COMPANY
6355 N.W. 36th. St., Ste. 305, VIRGINIA GARDENS, FL 33166
Phone : (305)871-1530 , Fax : (305)871-1531
e-mail: tilteco@aol.com
CA-0006719
WALTER A. TILLIT Jr. P.E.
FLORIDA Lic. # 44167

F.R.L
DRAWN BY:

05/13/2021
DATE

21-068
DRAWING No

SHEET 15 OF 36

HR-250DG CAPTURED DRY GLAZED CURTAIN WALL SYSTEM
LARGE MISSILE IMPACT LAMINATED GLASS

Oldcastle BuildingEnvelope™
803 Airport Rd - Terrell, TX 75160
www.OldcastleBE.com - Phone 800-869-4567

REV. No	DESCRIPTION	DATE	REV. No	DESCRIPTION	DATE
1	-	-	3	-	-
2	-	-	4	-	-

P.E. SEAL/SIGNATURE/DATE

WALTER A. TILLIT JR. LICENSE No. 44167 STATE OF FLORIDA PROFESSIONAL ENGINEER

MAXIMUM A.S.D DESIGN PRESSURE RATING FOR JAMBS AT SINGLE SPAN CURTAIN WALL FASTENED TO EXISTING STRUCTURE W/ 1/2"Ø FASTENERS (CONTINUED)

OPTION #1 : 2 FASTENER CONNECTION

MAXIMUM MULLION SPAN "L" (ft-in)	EFFECTIVE SPACING b = S_s /2 "b" ft-in	MAXIMUM A.S.D DESIGN PRESSURE RATING (psf) POURED CONCRETE (Min. f'c = 3ksi) SUBSTRATE FASTENER TYPES K	L	M	GROUT FILLED CONCRETE BLOCK SUBSTRATE FASTENER TYPES N	O	1/4" Min. THK ASTM A-36 STEEL SUBSTRATE FASTENER P
8' - 5"	1' - 9"	70.0	70.0	70.0	70.0	70.0	70.0
	2' - 0"	70.0	70.0	70.0	70.0	70.0	70.0
	2' - 3"	70.0	70.0	70.0	70.0	70.0	70.0
	2' - 6"	70.0	70.0	70.0	70.0	70.0	70.0
	2' - 9"	70.0	70.0	70.0	70.0	70.0	70.0
	3' - 3"	70.0	70.0	70.0	70.0	69.5	70.0
8' - 6"	1' - 9"	70.0	70.0	70.0	70.0	70.0	70.0
	2' - 0"	70.0	70.0	70.0	70.0	70.0	70.0
	2' - 3"	70.0	70.0	70.0	70.0	70.0	70.0
	2' - 6"	70.0	70.0	70.0	70.0	70.0	70.0
	2' - 9"	70.0	70.0	70.0	70.0	70.0	70.0
	3' - 3"	70.0	70.0	70.0	70.0	68.8	70.0
9' - 0"	1' - 9"	70.0	70.0	70.0	70.0	70.0	70.0
	2' - 0"	70.0	70.0	70.0	70.0	70.0	70.0
	2' - 3"	70.0	70.0	70.0	70.0	70.0	70.0
	2' - 6"	70.0	70.0	70.0	70.0	70.0	70.0
	2' - 9"	70.0	70.0	70.0	70.0	70.0	70.0
	3' - 3"	70.0	70.0	70.0	70.0	65.0	70.0
9' - 6"	1' - 9"	70.0	70.0	70.0	70.0	70.0	70.0
	2' - 0"	70.0	70.0	70.0	70.0	70.0	70.0
	2' - 3"	70.0	70.0	70.0	70.0	70.0	70.0
	2' - 6"	70.0	70.0	70.0	70.0	70.0	70.0
	2' - 9"	70.0	70.0	70.0	70.0	70.0	70.0
	3' - 3"	70.0	70.0	70.0	70.0	61.5	70.0
10' - 0"	1' - 9"	70.0	70.0	70.0	70.0	70.0	70.0
	2' - 0"	70.0	70.0	70.0	70.0	70.0	70.0
	2' - 3"	70.0	70.0	70.0	70.0	70.0	70.0
	2' - 6"	70.0	70.0	70.0	70.0	70.0	70.0
	2' - 9"	70.0	70.0	70.0	70.0	69.1	70.0
	3' - 3"	70.0	70.0	70.0	70.0	58.5	70.0
10' - 6"	1' - 9"	70.0	70.0	70.0	70.0	70.0	70.0
	2' - 0"	70.0	70.0	70.0	70.0	70.0	70.0
	2' - 3"	70.0	70.0	70.0	70.0	70.0	70.0
	2' - 6"	70.0	70.0	70.0	70.0	70.0	70.0
	2' - 9"	70.0	70.0	70.0	70.0	65.8	70.0
	3' - 3"	70.0	70.0	70.0	70.0	55.7	70.0
11' - 0"	1' - 9"	70.0	70.0	70.0	70.0	70.0	70.0
	2' - 0"	70.0	70.0	70.0	70.0	70.0	70.0
	2' - 3"	70.0	70.0	70.0	70.0	70.0	70.0
	2' - 6"	70.0	70.0	70.0	70.0	69.1	70.0
	2' - 9"	70.0	70.0	70.0	70.0	62.8	70.0
	3' - 3"	70.0	70.0	70.0	70.0	53.1	70.0
11' - 6"	1' - 9"	70.0	70.0	70.0	70.0	70.0	70.0
	2' - 0"	70.0	70.0	70.0	70.0	70.0	70.0
	2' - 3"	70.0	70.0	70.0	70.0	70.0	70.0
	2' - 6"	70.0	70.0	70.0	70.0	66.1	70.0
	2' - 9"	70.0	70.0	70.0	70.0	60.1	70.0
	3' - 3"	70.0	70.0	70.0	70.0	50.8	70.0
12' - 0"	1' - 9"	70.0	70.0	70.0	70.0	70.0	70.0
	2' - 0"	70.0	70.0	70.0	70.0	70.0	70.0
	2' - 3"	70.0	70.0	70.0	70.0	70.0	70.0
	2' - 6"	70.0	70.0	70.0	70.0	63.3	70.0
	2' - 9"	70.0	70.0	70.0	70.0	57.6	70.0
	3' - 3"	70.0	70.0	70.0	70.0	48.7	70.0
12' - 6"	1' - 9"	70.0	70.0	70.0	70.0	70.0	70.0
	2' - 0"	70.0	70.0	70.0	70.0	70.0	70.0
	2' - 3"	70.0	70.0	70.0	70.0	67.6	70.0
	2' - 6"	70.0	70.0	70.0	70.0	60.8	70.0
	2' - 9"	70.0	70.0	70.0	70.0	55.3	70.0
	3' - 3"	70.0	70.0	70.0	70.0	46.8	70.0

OPTION #2 : 3 FASTENERS CONNECTION

MAXIMUM MULLION SPAN "L" (ft-in)	EFFECTIVE SPACING b = S_s /2 "b" ft-in	MAXIMUM A.S.D DESIGN PRESSURE RATING (psf) POURED CONCRETE (Min. f'c = 3ksi) SUBSTRATE FASTENER TYPES K	L	M	GROUT FILLED CONCRETE BLOCK SUBSTRATE FASTENER TYPES N	O	1/4" Min. THK ASTM A-36 STEEL SUBSTRATE FASTENER P
8' - 5" MAX. 12'-6"	1' - 9"	70.0	70.0	70.0	70.0	70.0	70.0
	2' - 0"	70.0	70.0	70.0	70.0	70.0	70.0
	2' - 3"	70.0	70.0	70.0	70.0	70.0	70.0
	2' - 6"	70.0	70.0	70.0	70.0	70.0	70.0
	2' - 9"	70.0	70.0	70.0	70.0	70.0	70.0
	3' - 3"	70.0	70.0	70.0	70.0	70.0	70.0

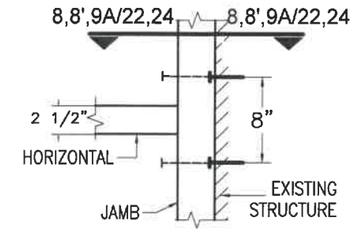

OPTION # 1 (ELEVATION)
(2) FASTENERS CONNECTION

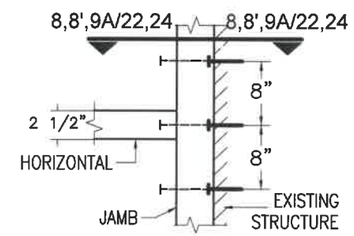

OPTION # 2 (ELEVATION)
(3) FASTENERS CONNECTION

* SEE SHEET 9 FOR EFFECTIVE SPACING DEFINITION AT ISOMETRIC.

(B) FASTENER TYPES REQUIREMENTS:

K - 1/2"Ø HILTI KWIK BOLT TZ ANCHOR W/ 2" Min. EMBEDMENT INTO POURED CONCRETE (Min. f'c = 3 ksi) BEYOND ANY FINISH MATERIAL, W/ 4" MIN. EDGE DISTANCE.

L - 1/2"Ø HILTI KWIK BOLT 3 ANCHOR W/ 3 1/2" Min. EMBEDMENT INTO POURED CONCRETE (Min. f'c = 3 ksi) BEYOND ANY FINISH MATERIAL, W/ 4" MIN. EDGE DISTANCE.

M - 1/2"Ø HILTI HUS-H SCREW ANCHOR W/ 3" Min. EMBEDMENT INTO POURED CONCRETE (Min. f'c = 3 ksi) BEYOND ANY FINISH MATERIAL, W/ 4" MIN. EDGE DISTANCE.

N - 1/2"Ø HILTI KWIK BOLT 3 ANCHOR W/ 3 1/2" Min. EMBEDMENT INTO GROUT FILLED CONCRETE BLOCK BEYOND ANY FINISH MATERIAL, W/ 4" MIN. EDGE DISTANCE.

O - 1/2"Ø HILTI HUS-H SCREW ANCHOR W/ 3" Min. EMBEDMENT INTO GROUT FILLED CONCRETE BLOCK BEYOND ANY FINISH MATERIAL, W/ 4" MIN. EDGE DISTANCE.

P - 1/2"Ø-13 TYPE "F" GRADE 5 BOLT TO 1/4" MIN. THK. ASTM A-36 STEEL W/ 1" MIN. EDGE DISTANCE OR 1/2"Ø-13 SAE GRADE 5, GALVANIZED STEEL BOLT W/ LOCK WASHER & NUT TO 1/4" MIN. THK. ASTM A-36 STEEL & MIN. E.D. = 1".

FLORIDA BUILDING CODE (Non High Velocity Hurricane Zone)

HR-250DG CAPTURED DRY GLAZED CURTAIN WALL SYSTEM
LARGE MISSILE IMPACT LAMINATED GLASS

F.R.L
DRAWN BY:

05/13/2021
DATE

21-068
DRAWING No

SHEET 16 OF 36

Oldcastle BuildingEnvelope™
803 Airport Rd - Terrell, TX 75160
www.OldcastleBE.com - Phone 800-869-4567

REV. No	DESCRIPTION	DATE	REV. No	DESCRIPTION	DATE
1	-	-	3	-	-
2	-	-	4	-	-

©2021 TILTECO, INC

TILTECO INC.
TILLIT TESTING & ENGINEERING COMPANY
6355 N.W. 36th. St., Ste. 305, VIRGINIA GARDENS, FL. 33166
Phone : (305)871-1530 , Fax : (305)871-1531
e-mail: tilteco@aol.com
CA-0006719
WALTER A. TILLIT Jr. P.E.
FLORIDA Lic. # 44167

P.E. SEAL/SIGNATURE/DATE

WALTER A. TILLIT JR. LICENSE No. 44167 STATE OF FLORIDA PROFESSIONAL ENGINEER

MAXIMUM A.S.D. DESIGN PRESSURE RATING FOR JAMBS AT TWIN SPAN CURTAIN WALL FASTENED TO EXISTING STRUCTURE W 1/2"Ø FASTENERS (CONTINUED)

OPTION #1 : 2 FASTENERS CONNECTION

MAXIMUM MULLION SPAN	EFFECTIVE SPACING b = S_5/2 *	MAXIMUM A.S.D. DESIGN PRESSURE RATING (psf)					
		POURED CONCRETE (Min. f'c = 3ksi) SUBSTRATE			GROUT FILLED CONCRETE BLOCK SUBSTRATE		1/4" Min. THK ASTM A-36 STEEL SUBSTRATE
		FASTENER TYPES			FASTENER TYPES		FASTENER
"L" (ft-in)	"b" (ft-in)	K	L	M	N	O	P
8'-5"	1'-9"	70.0	70.0	70.0	70.0	70.0	70.0
	2'-0"	70.0	70.0	70.0	70.0	67.9	70.0
	2'-3"	70.0	70.0	70.0	70.0	60.3	70.0
	2'-6"	70.0	70.0	70.0	70.0	54.3	70.0
	2'-9"	70.0	70.0	70.0	70.0	49.4	70.0
8'-6"	1'-9"	70.0	70.0	70.0	70.0	70.0	70.0
	2'-0"	70.0	70.0	70.0	70.0	67.9	70.0
	2'-3"	70.0	70.0	70.0	70.0	60.3	70.0
	2'-6"	70.0	70.0	70.0	70.0	54.3	70.0
	2'-9"	70.0	70.0	70.0	70.0	49.4	70.0
9'-0"	1'-9"	70.0	70.0	70.0	70.0	70.0	70.0
	2'-0"	70.0	70.0	70.0	70.0	67.9	70.0
	2'-3"	70.0	70.0	70.0	70.0	60.3	70.0
	2'-6"	70.0	70.0	70.0	70.0	54.3	70.0
	2'-9"	70.0	70.0	70.0	70.0	49.4	70.0
9'-6"	1'-9"	70.0	70.0	70.0	70.0	70.0	70.0
	2'-0"	70.0	70.0	70.0	70.0	67.9	70.0
	2'-3"	70.0	70.0	70.0	70.0	60.3	70.0
	2'-6"	70.0	70.0	70.0	70.0	54.3	70.0
	2'-9"	70.0	70.0	70.0	70.0	49.4	70.0
10'-0"	1'-9"	70.0	70.0	70.0	70.0	70.0	70.0
	2'-0"	70.0	70.0	70.0	70.0	67.9	70.0
	2'-3"	70.0	70.0	70.0	70.0	60.3	70.0
	2'-6"	70.0	70.0	70.0	70.0	54.3	70.0
	2'-9"	70.0	70.0	70.0	70.0	49.4	70.0
10'-6"	1'-9"	70.0	70.0	70.0	70.0	70.0	70.0
	2'-0"	70.0	70.0	70.0	70.0	67.9	70.0
	2'-3"	70.0	70.0	70.0	70.0	60.3	70.0
	2'-6"	70.0	70.0	70.0	70.0	54.3	70.0
	2'-9"	70.0	70.0	70.0	70.0	49.4	70.0
11'-0"	1'-9"	70.0	70.0	70.0	70.0	70.0	70.0
	2'-0"	70.0	70.0	70.0	70.0	67.9	70.0
	2'-3"	70.0	70.0	70.0	70.0	60.3	70.0
	2'-6"	70.0	70.0	70.0	70.0	54.3	70.0
	2'-9"	70.0	70.0	70.0	70.0	49.4	70.0
11'-6"	1'-9"	70.0	70.0	70.0	70.0	70.0	70.0
	2'-0"	70.0	70.0	70.0	70.0	67.9	70.0
	2'-3"	70.0	70.0	70.0	70.0	60.3	70.0
	2'-6"	70.0	70.0	70.0	70.0	54.3	70.0
	2'-9"	70.0	70.0	70.0	70.0	49.4	70.0
12'-0"	1'-9"	70.0	70.0	70.0	70.0	70.0	70.0
	2'-0"	70.0	70.0	70.0	70.0	67.9	70.0
	2'-3"	70.0	70.0	70.0	70.0	60.3	70.0
	2'-6"	70.0	70.0	70.0	70.0	54.3	70.0
	2'-9"	70.0	70.0	70.0	70.0	49.4	70.0
12'-6"	1'-9"	70.0	70.0	70.0	70.0	70.0	70.0
	2'-0"	70.0	70.0	70.0	70.0	67.9	70.0
	2'-3"	70.0	70.0	70.0	70.0	60.3	70.0
	2'-6"	70.0	70.0	70.0	70.0	54.3	70.0
	2'-9"	70.0	70.0	70.0	70.0	49.4	70.0

OPTION #2 : 3 FASTENERS CONNECTION

MAXIMUM MULLION SPAN	EFFECTIVE SPACING b = S_5/2 *	MAXIMUM A.S.D. DESIGN PRESSURE RATING (psf)					
		POURED CONCRETE (Min. f'c = 3ksi) SUBSTRATE			GROUT FILLED CONCRETE BLOCK SUBSTRATE		1/4" Min. THK ASTM A-36 STEEL SUBSTRATE
		FASTENER TYPES			FASTENER TYPES		FASTENER
"L" (ft-in)	"b" (ft-in)	K	L	M	N	O	P
8'-5" MAX. 12'-6"	1'-9"	70.0	70.0	70.0	70.0	70.0	70.0
	2'-0"	70.0	70.0	70.0	70.0	70.0	70.0
	2'-3"	70.0	70.0	70.0	70.0	70.0	70.0
	2'-6"	70.0	70.0	70.0	70.0	70.0	70.0
	2'-9"	70.0	70.0	70.0	70.0	70.0	70.0

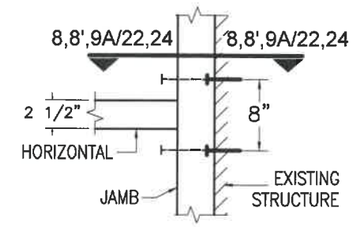

OPTION # 1 (ELEVATION)
(2) FASTENERS CONNECTION

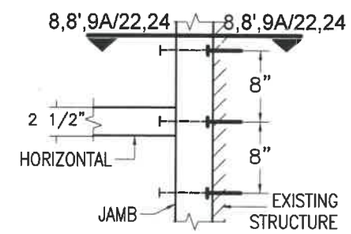

OPTION # 2 (ELEVATION)
(3) FASTENERS CONNECTION

B FASTENER TYPES REQUIREMENTS:

K - 1/2"Ø HILTI KWIK BOLT TZ ANCHOR W/ 2" Min. EMBEDMENT INTO POURED CONCRETE (Min. f'c = 3 ksi) BEYOND ANY FINISH MATERIAL, W/ 4" MIN. EDGE DISTANCE.

L - 1/2"Ø HILTI KWIK BOLT 3 ANCHOR W/ 3 1/2" Min. EMBEDMENT INTO POURED CONCRETE (Min. f'c = 3 ksi) BEYOND ANY FINISH MATERIAL, W/ 4" MIN. EDGE DISTANCE.

M - 1/2"Ø HILTI HUS-H SCREW ANCHOR W/ 3" Min. EMBEDMENT INTO POURED CONCRETE (Min. f'c = 3 ksi) BEYOND ANY FINISH MATERIAL, W/ 4" MIN. EDGE DISTANCE.

N - 1/2"Ø HILTI KWIK BOLT 3 ANCHOR W/ 3 1/2" Min. EMBEDMENT INTO GROUT FILLED CONCRETE BLOCK BEYOND ANY FINISH MATERIAL, W/ 4". EDGE DISTANCE.

O - 1/2"Ø HILTI HUS-H SCREW ANCHOR W/ 3" Min. EMBEDMENT INTO GROUT FILLED CONCRETE BLOCK BEYOND ANY FINISH MATERIAL, W/ 4" MIN. EDGE DISTANCE.

P - 1/2"Ø-13 TYPE "F" GRADE 5 BOLT TO 1/4" MIN. THK. ASTM A-36 STEEL W/ 1" MIN. EDGE DISTANCE OR 1/2"Ø -13 SAE GALVANIZED STEEL GRADE 5 HHB THRU BOLT W/ NUT & LOCK WASHER TO 1/4" MIN. THK. ASTM A-36 STEEL W/ 1" MIN. EDGE DISTANCE.

* SEE SHEET 10 FOR EFFECTIVE SPACING DEFINITION AT ISOMETRIC.

FLORIDA BUILDING CODE (Non High Velocity Hurricane Zone)

HR-250DG CAPTURED DRY GLAZED CURTAIN WALL SYSTEM
LARGE MISSILE IMPACT LAMINATED GLASS

F.R.L
DRAWN BY:

05/13/2021
DATE

21-068
DRAWING No

SHEET 17 OF 36

Oldcastle BuildingEnvelope™
803 Airport Rd - Terrell, TX 75160
www.OldcastleBE.com - Phone 800-869-4567

REV. No	DESCRIPTION	DATE	REV. No	DESCRIPTION	DATE
1	-	-	3	-	-
2	-	-	4	-	-

©2021 TILTECO, INC

TILTECO INC.
TILLIT TESTING & ENGINEERING COMPANY
6355 N.W. 36th. St. Ste. 305, VIRGINIA GARDENS, FL 33166
Phone : (305)871-1530 , Fax : (305)871-1531
e-mail: tilteco@aol.com
CA-0006719
WALTER A. TILLIT Jr. P.E.
FLORIDA Lic. # 44167

WALTER A. TILLIT JR. LICENSE No. 44167 STATE OF FLORIDA PROFESSIONAL ENGINEER

P.E. SEAL/SIGNATURE/DATE

HEAD CONNECTION DETAILS (SIDE VIEWS)

SINGLE SPAN

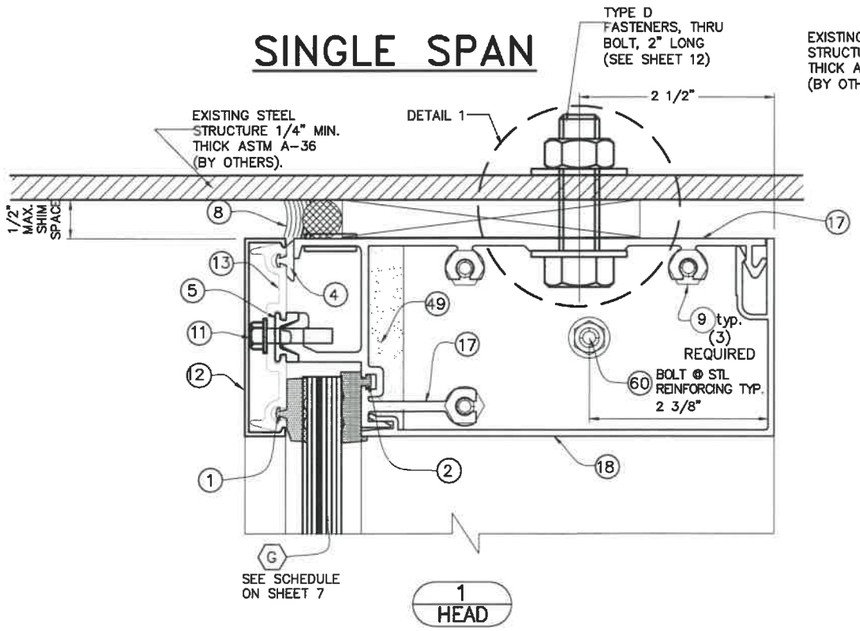

1
HEAD

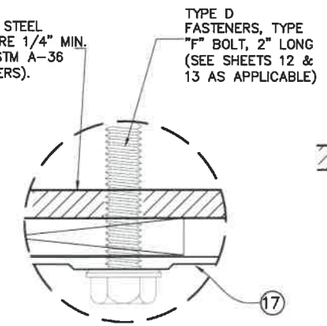

ALTERNATE FASTENER DETAIL 1

TWIN SPAN

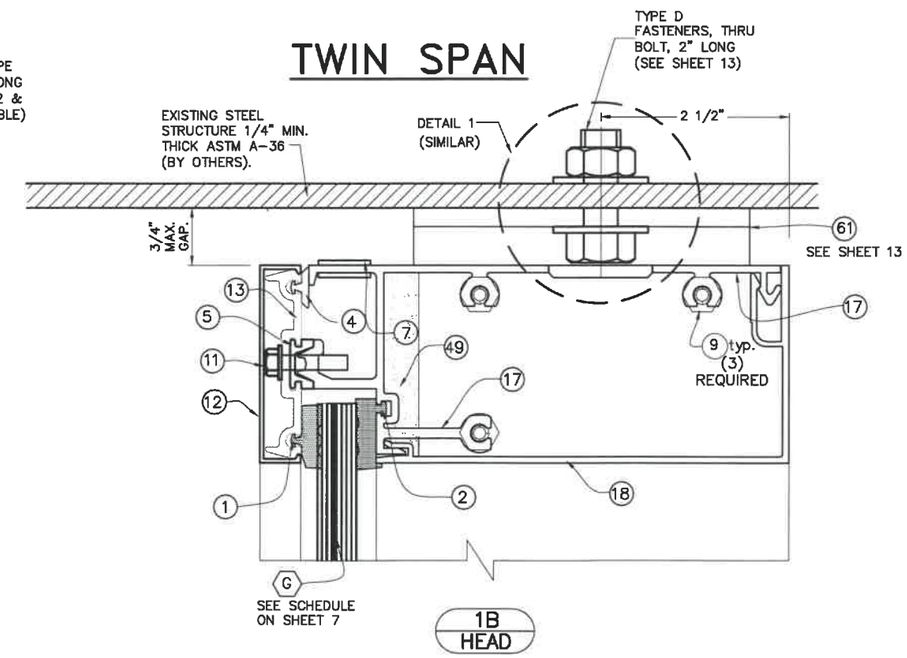

1B
HEAD

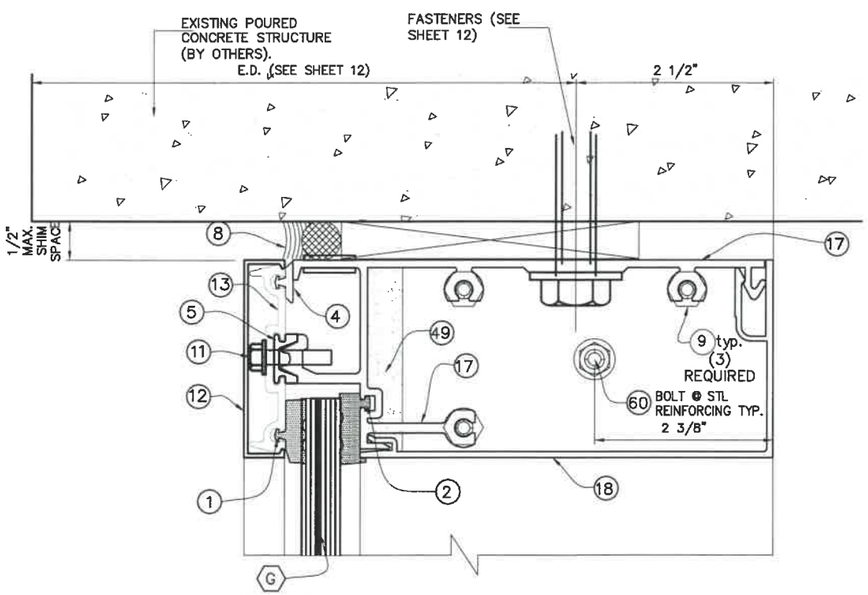

1A
HEAD

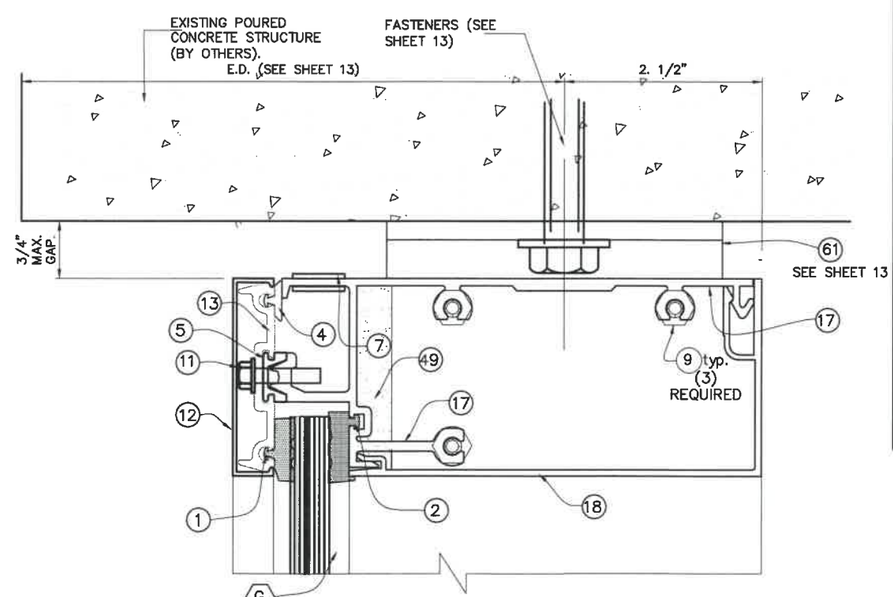

1C
HEAD

NOTE: SEE ALSO DETAILS 1, 2, 3 & 4, & 18 ON SHEETS 25 & 28 RESPECTIVELY

FLORIDA BUILDING CODE (Non High Velocity Hurricane Zone)

F.R.L. DRAWN BY:

05/13/2021 DATE

21-068 DRAWING No

SHEET 18 OF 36

HR-250DG CAPTURED DRY GLAZED CURTAIN WALL SYSTEM
LARGE MISSILE IMPACT LAMINATED GLASS

Oldcastle BuildingEnvelope™
803 Airport Rd - Terrell, TX 75160
www.OldcastleBE.com - Phone 800-869-4567

REV. No	DESCRIPTION	DATE	REV. No	DESCRIPTION	DATE
1	-	-	3	-	-
2	-	-	4	-	-

©2021 TILTECO, INC

TILTECO INC.
TILLIT TESTING & ENGINEERING COMPANY
6355 N.W. 36th. St., Ste. 305, VIRGINIA GARDENS, FL 33166
Phone : (305)871-1530 , Fax : (305)871-1531
e-mail: tilteco@aol.com
CA-0006719
WALTER A. TILLIT Jr. P.E.
FLORIDA Lic. # 44167

P.E. SEAL/SIGNATURE/DATE

WALTER A. TILLIT JR. LICENSE No. 44167 STATE OF FLORIDA PROFESSIONAL ENGINEER

HORIZONTAL CONNECTION DETAILS (SIDE VIEWS)

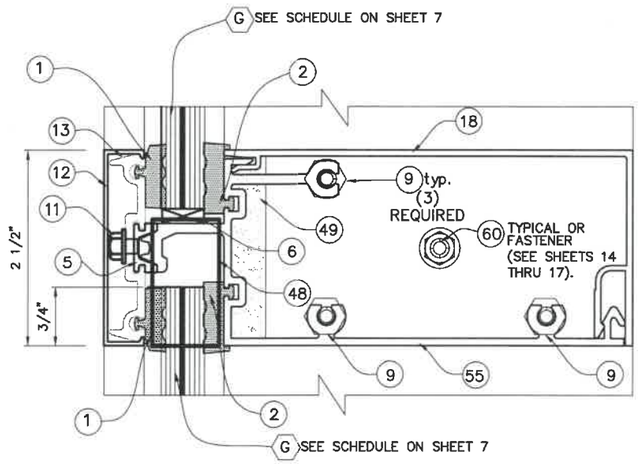

2
INT HORI

AT SINGLE OR TWIN SPAN

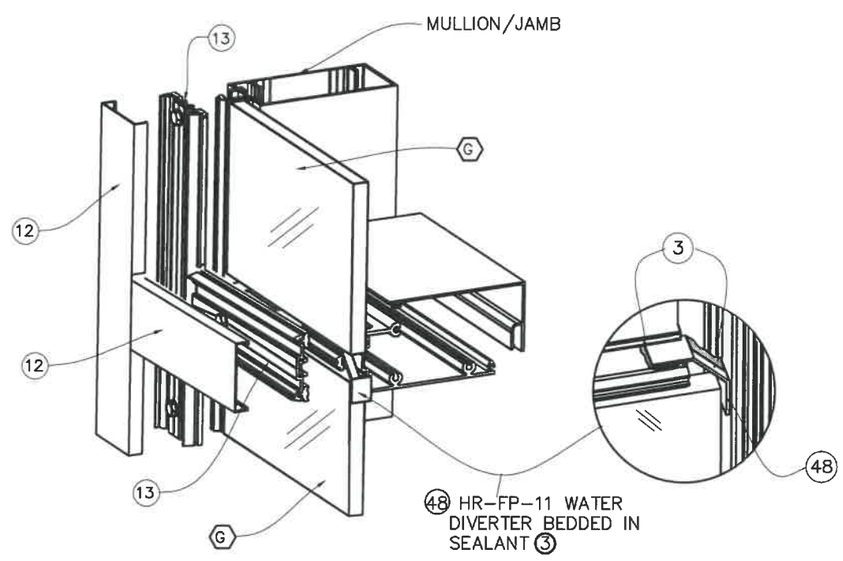

DIVERTER 48 INSTALLATION DETAIL AT HORIZONTAL

FLORIDA BUILDING CODE (Non High Velocity Hurricane Zone)

F.R.L.
DRAWN BY:

05/13/2021
DATE

21-068
DRAWING No

HR-250DG CAPTURED DRY GLAZED CURTAIN WALL SYSTEM
LARGE MISSILE IMPACT LAMINATED GLASS

Oldcastle BuildingEnvelope™
803 Airport Rd - Terrell, TX 75160
www.OldcastleBE.com - Phone 800-869-4567

REV. No	DESCRIPTION	DATE	REV. No	DESCRIPTION	DATE
1	-	-	3	-	-
2	-	-	4	-	-

SHEET 19 OF 36

©2021 TILTECO, INC

TILTECO INC.
TILLIT TESTING & ENGINEERING COMPANY
6355 N.W. 36th. St., Ste. 305, VIRGINA GARDENS, FL 33166
Phone : (305)871-1530 . Fax : (305)871-1531
e-mail: tilteco@aol.com
CA-0006719
WALTER A. TILLIT Jr. P.E.
FLORIDA Lic. # 44167

WALTER A. TILLIT JR. LICENSE No. 44167 STATE OF FLORIDA PROFESSIONAL ENGINEER

P.E. SEAL/SIGNATURE/DATE

SILL CONNECTION DETAILS (SIDE VIEWS)

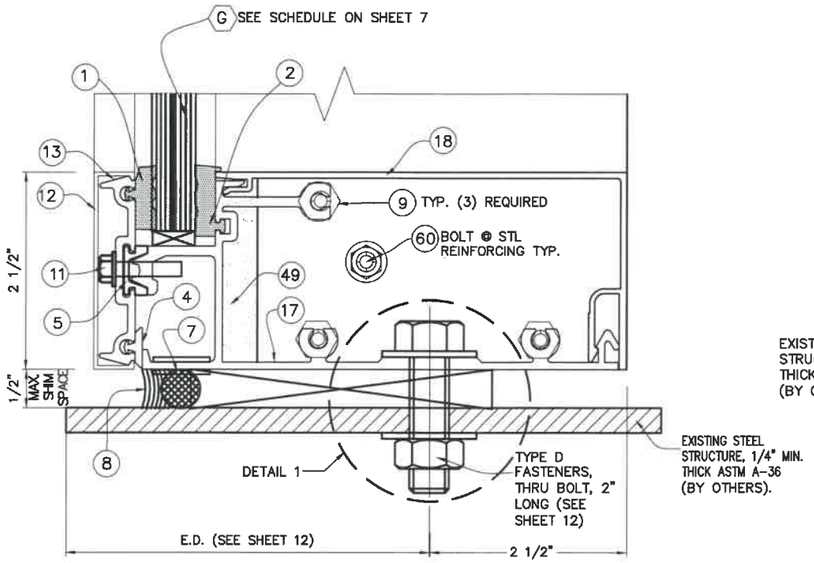

3
SILL

CONNECTION TO STEEL STRUCTURE

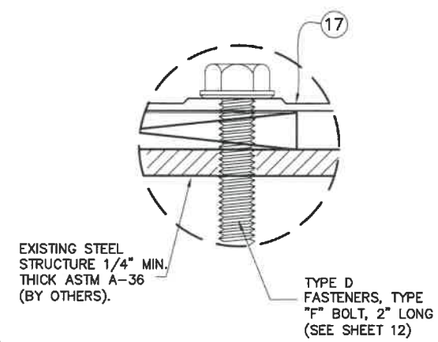

ALTERNATE FASTENER DETAIL 1

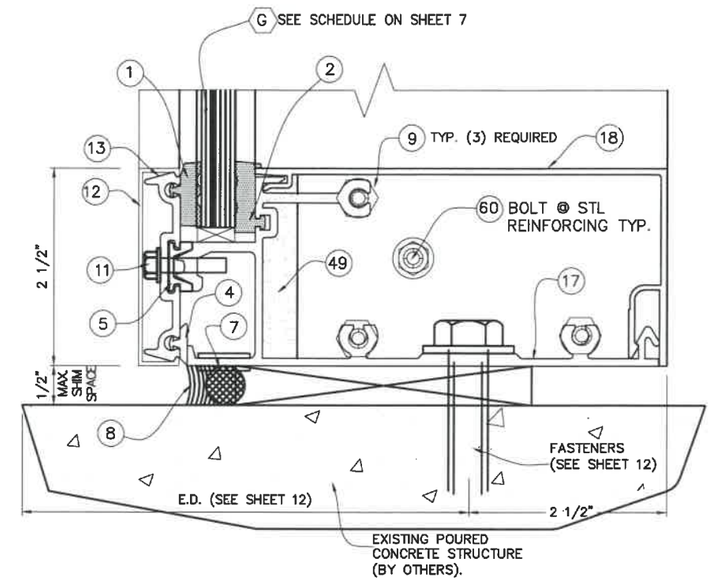

3
SILL

CONNECTION TO POURED CONCRETE STRUCTURE

NOTE: SEE ALSO DETAILS 1 THRU 4 ON SHEET 25

FLORIDA BUILDING CODE (Non High Velocity Hurricane Zone)

HR-250DG CAPTURED DRY GLAZED CURTAIN WALL SYSTEM
LARGE MISSILE IMPACT LAMINATED GLASS

Oldcastle BuildingEnvelope™
803 Airport Rd - Terrell, TX 75160
www.OldcastleBE.com - Phone 800-869-4567

REV. No	DESCRIPTION	DATE	REV. No	DESCRIPTION	DATE
1	-	-	3	-	-
2	-	-	4	-	-

F.R.L
DRAWN BY:

05/13/2021
DATE

21-068
DRAWING No

SHEET 20 OF 36

©2021 TILTECO, INC

TILLIT TESTING & ENGINEERING COMPANY INC.
6355 N.W. 36th. St., Ste. 305, VIRGINIA GARDENS, FL 33166
Phone : (305)871-1530 , Fax : (305)871-1531
e-mail: tilteco@aol.com
CA-0006719
WALTER A. TILLIT Jr. P.E.
FLORIDA Lic. # 44167

P.E. SEAL/SIGNATURE/DATE

WALTER A. TILLIT JR. ENGINEER
LICENSE
No. 44167
STATE OF FLORIDA
PROFESSIONAL ENGINEER

END CAP & WATER DIVERTER SEALANT @ HORIZONTALS

HEAD

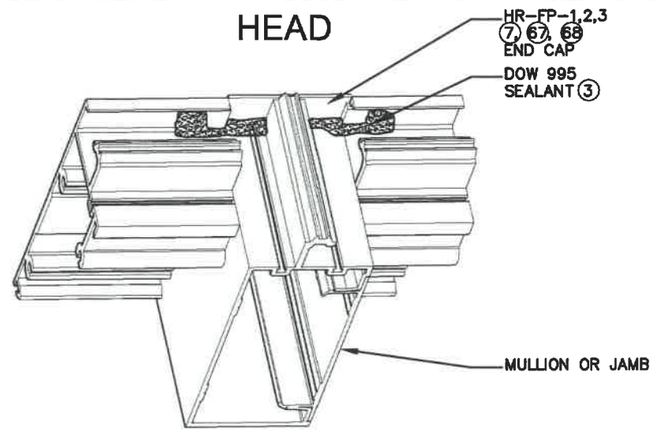

HORIZONTAL

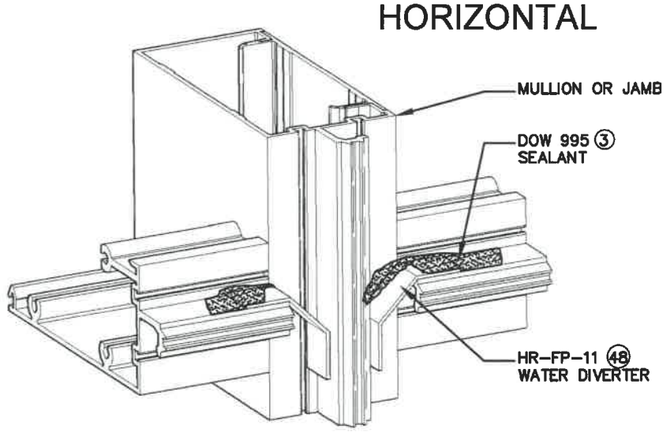

SILL

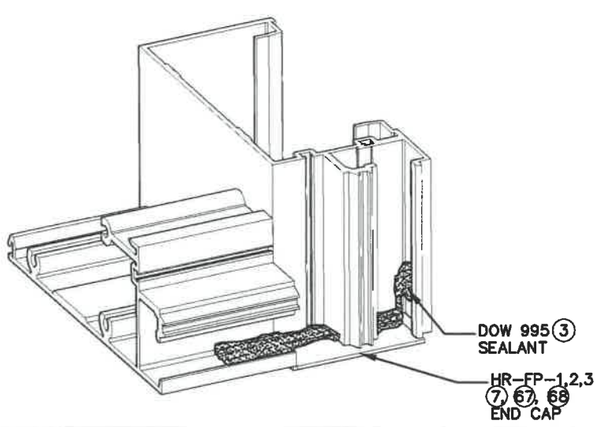

DOW 995 SEALANT @ GASKET JOINT @ HORIZONTALS

HEAD

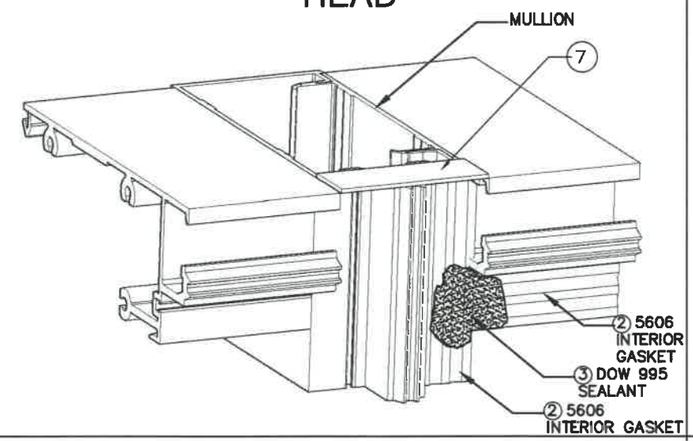

HORIZONTAL

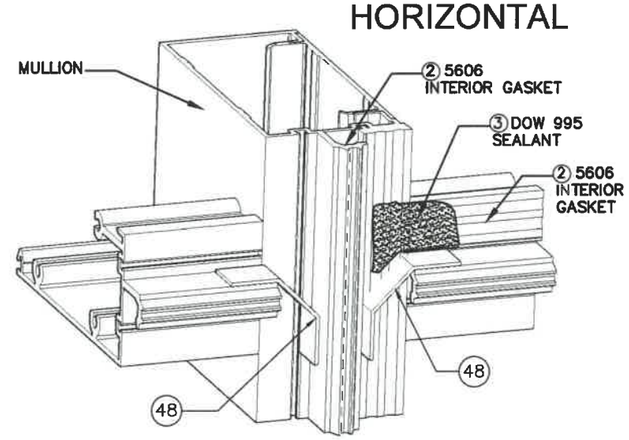

SILL

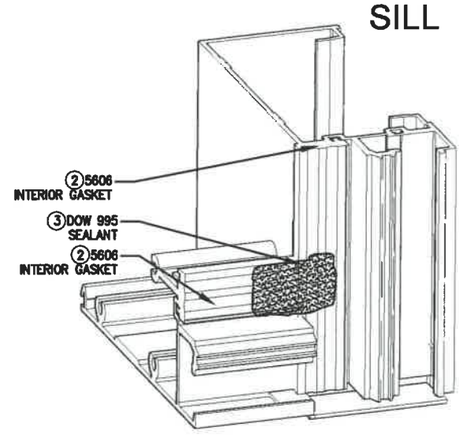

GLAZING DETAIL @ HORIZONTALS

HEAD

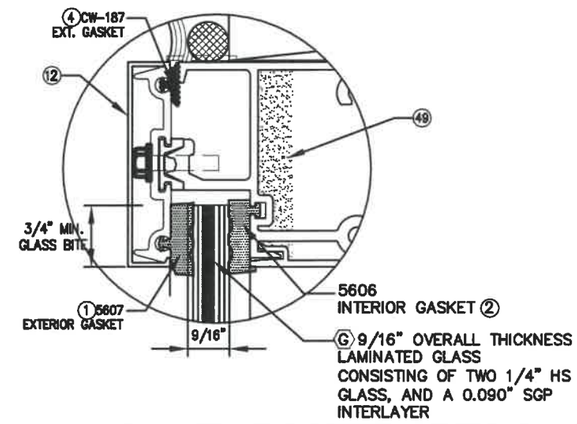

HORIZONTAL

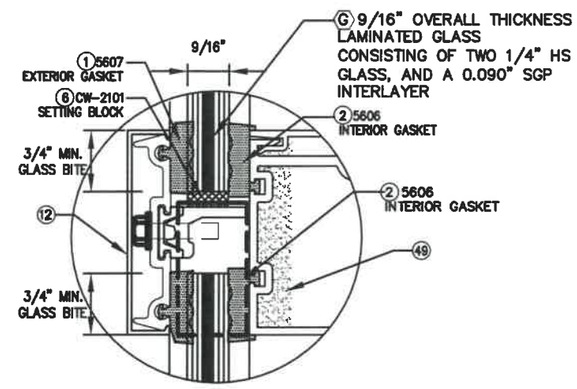

SILL

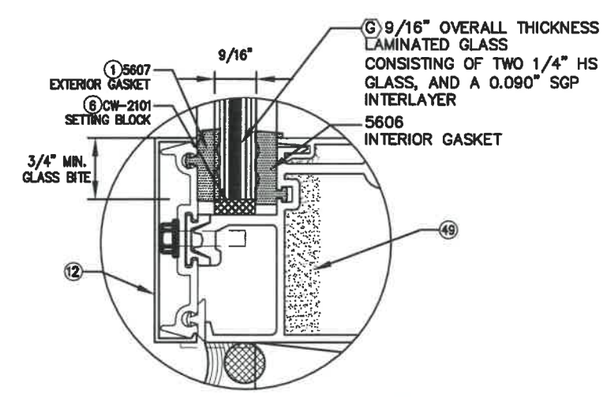

FLORIDA BUILDING CODE (Non High Velocity Hurricane Zone)

HR-250DG CAPTURED DRY GLAZED CURTAIN WALL SYSTEM
LARGE MISSILE IMPACT LAMINATED GLASS

Oldcastle BuildingEnvelope™
803 Airport Rd - Terrell, TX 75160
www.OldcastleBE.com - Phone 800-869-4567

DRAWN BY:	DATE	DRAWING No	SHEET 20A OF 36
F.R.L	05/13/2021	21-068	

REV. No	DESCRIPTION	DATE	REV. No	DESCRIPTION	DATE
1	-	-	3	-	-
2	-	-	4	-	-

©2021 TILTECO, INC

TILTECO INC.
TILLIT TESTING & ENGINEERING COMPANY
6355 N.W. 36th. St., Ste. 305, VIRGINIA GARDENS, FL 33166
Phone : (305)871-1530 . . Fax : (305)871-1531
e-mail: tilteco@aol.com
CA-0006719
WALTER A. TILLIT Jr. P.E.
FLORIDA Lic. # 44167

P.E. SEAL/SIGNATURE/DATE

WALTER A. TILLIT JR. LICENSE No. 44167 STATE OF FLORIDA PROFESSIONAL ENGINEER

STANDARD MULLION DETAILS (PLAN)

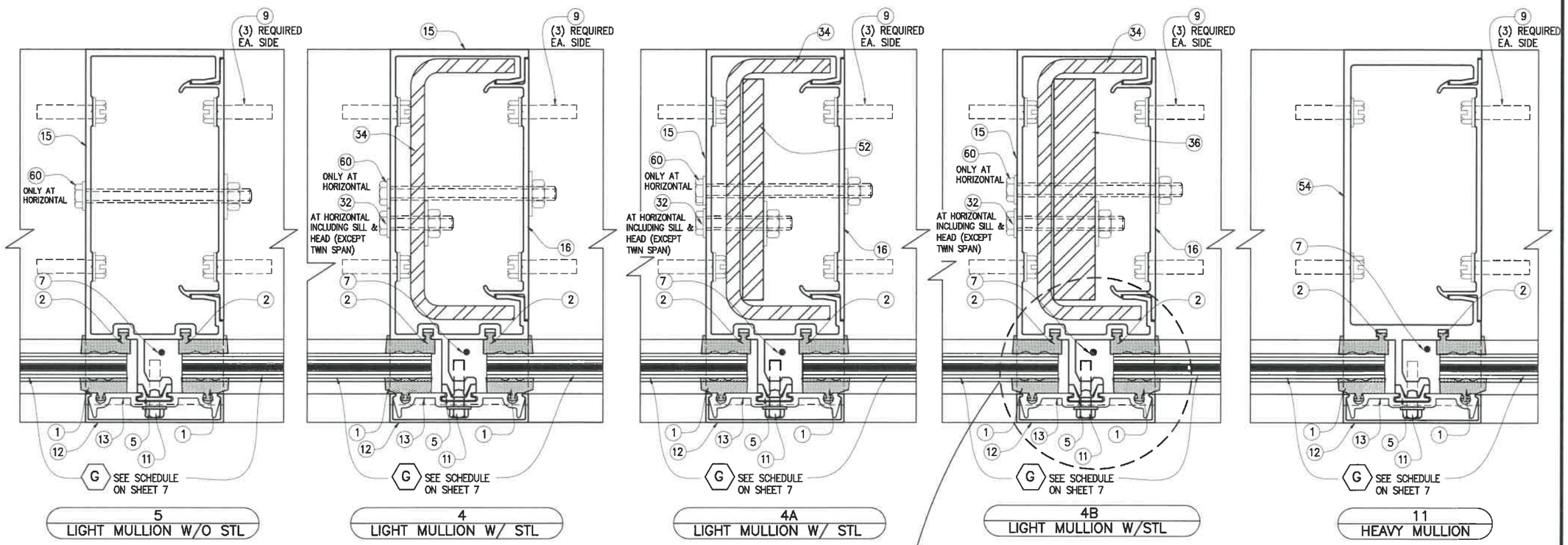

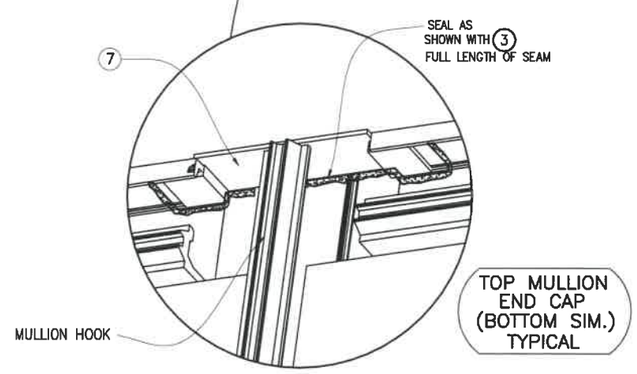

INTERIOR SEALING ELEVATION DETAIL @ MULLION END CAP

FLORIDA BUILDING CODE (Non High Velocity Hurricane Zone)

HR-250DG CAPTURED DRY GLAZED CURTAIN WALL SYSTEM
LARGE MISSILE IMPACT LAMINATED GLASS

Oldcastle BuildingEnvelope™
803 Airport Rd - Terrell, TX 75160
www.OldcastleBE.com - Phone 800-869-4567

REV. No	DESCRIPTION	DATE	REV. No	DESCRIPTION	DATE
1	-	-	3	-	-
2	-	-	4	-	-

F.R.L
DRAWN BY:

05/13/2021
DATE

21-068
DRAWING No

SHEET 21 OF 36

©2021 TILTECO, INC

TILTECO INC.
TILLIT TESTING & ENGINEERING COMPANY
6355 N.W. 36th. St., Ste. 305, VIRGINIA GARDENS, FL 33166
Phone : (305)871-1530 , Fax : (305)871-1531
e-mail: tilteco@aol.com
CA-0006719
WALTER A. TILLIT Jr. P.E.
FLORIDA Lic. # 44167

P.E. SEAL/SIGNATURE/DATE

WALTER A. TILLIT JR. LICENSE No. 44167 STATE OF FLORIDA PROFESSIONAL ENGINEER

JAMB CONNECTIONS AT HORIZONTALS (PLAN)

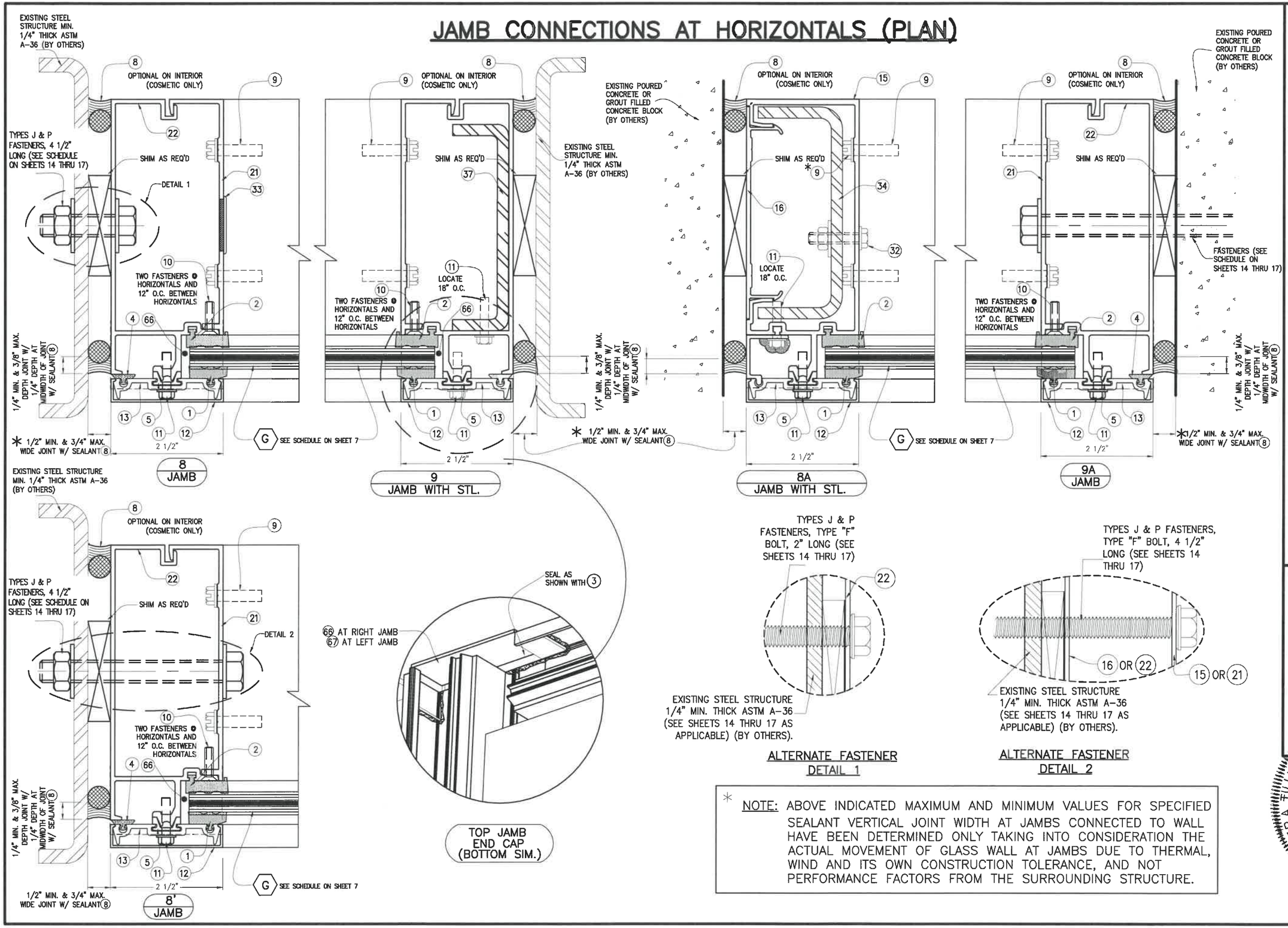

* NOTE: ABOVE INDICATED MAXIMUM AND MINIMUM VALUES FOR SPECIFIED SEALANT VERTICAL JOINT WIDTH AT JAMBS CONNECTED TO WALL HAVE BEEN DETERMINED ONLY TAKING INTO CONSIDERATION THE ACTUAL MOVEMENT OF GLASS WALL AT JAMBS DUE TO THERMAL, WIND AND ITS OWN CONSTRUCTION TOLERANCE, AND NOT PERFORMANCE FACTORS FROM THE SURROUNDING STRUCTURE.

FLORIDA BUILDING CODE (Non High Velocity Hurricane Zone)

HR-250DG CAPTURED DRY GLAZED CURTAIN WALL SYSTEM
LARGE MISSILE IMPACT LAMINATED GLASS

F.R.L. DRAWN BY:
05/13/2021 DATE
21-068 DRAWING No
SHEET 22 OF 36

Oldcastle BuildingEnvelope™
803 Airport Rd - Terrell, TX 75160
www.OldcastleBE.com - Phone 800-869-4567

REV. No	DESCRIPTION	DATE	REV. No	DESCRIPTION	DATE
1	-	-	3	-	-
2	-	-	4	-	-

©2021 TILTECO, INC

TILTECO INC.
TILLIT TESTING & ENGINEERING COMPANY
6355 N.W. 36th. St., Ste. 305, VIRGINIA GARDENS, FL 33166
Phone : (305)871-1530 . Fax : (305)871-1531
e-mail: tilteco@aol.com
CA-0006719
WALTER A. TILLIT Jr. P.E.
FLORIDA Lic. # 44167

P.E. SEAL/SIGNATURE/DATE

WALTER A. TILLIT JR. LICENSE No. 44167 STATE OF FLORIDA PROFESSIONAL ENGINEER

CORNER MULLION DETAILS (PLAN)

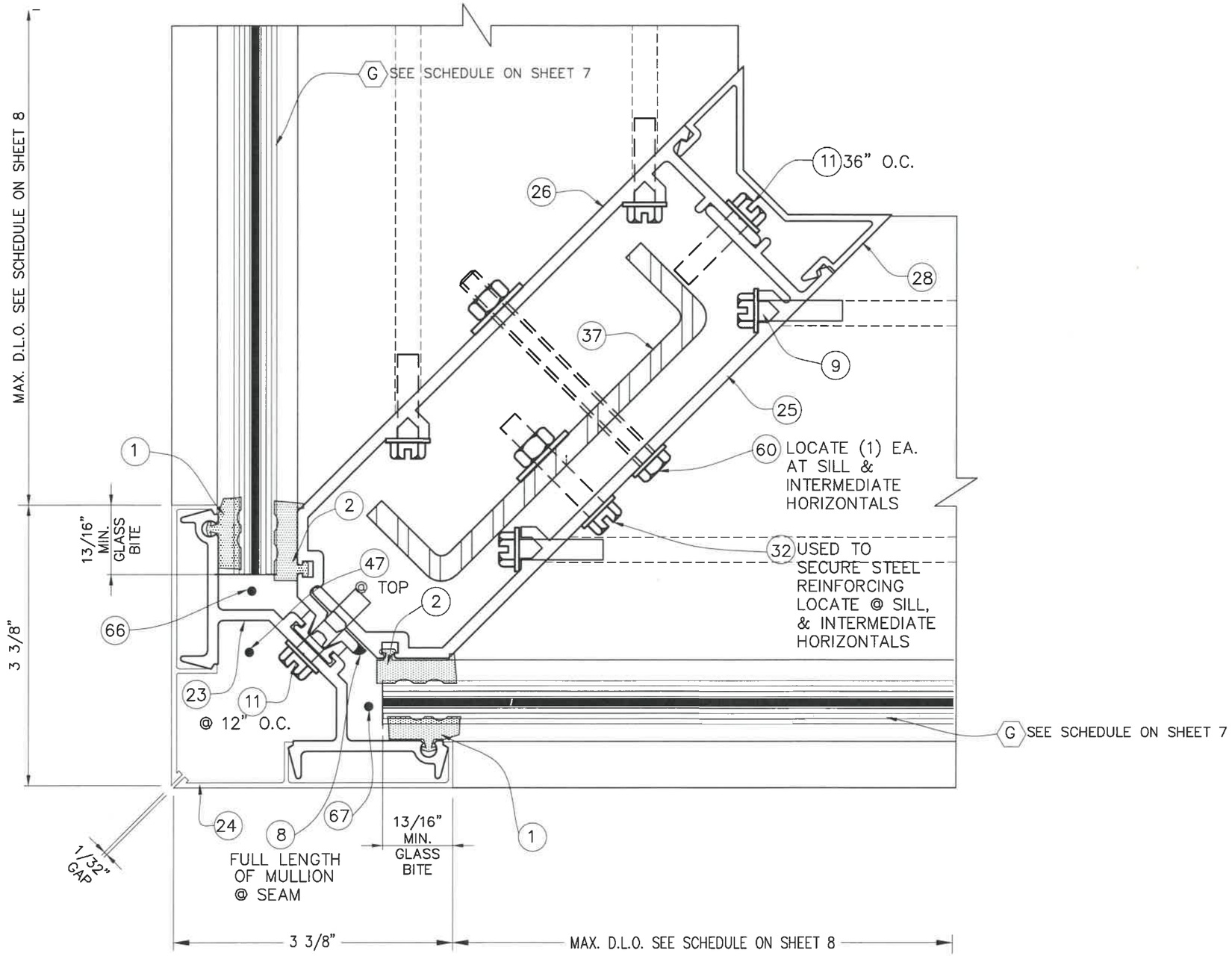

14
90 DEG CORNER CAPTURED PLAN

FLORIDA BUILDING CODE (Non High Velocity Hurricane Zone)

HR-250DG CAPTURED DRY GLAZED CURTAIN WALL SYSTEM
LARGE MISSILE IMPACT LAMINATED GLASS

Oldcastle BuildingEnvelope™
803 Airport Rd - Terrell, TX 75160
www.OldcastleBE.com - Phone 800-869-4567

REV. No	DESCRIPTION	DATE	REV. No	DESCRIPTION	DATE
1	-	-	3	-	-
2	-	-	4	-	-

F.R.L
DRAWN BY:

05/13/2021
DATE

21-068
DRAWING No

SHEET 23 OF 36

©2021 TILTECO, INC

TILTECO, INC
TILTECO INC.
TILLIT TESTING & ENGINEERING COMPANY
6355 N.W. 36th. St., Ste. 305, VIRGINIA GARDENS, FL 33166
Phone : (305)871-1530 . Fax : (305)871-1531
e-mail: tilteco@aol.com
CA-0006719
WALTER A. TILLIT Jr. P.E.
FLORIDA Lic. # 44167

WALTER A. TILLIT JR. LICENSE No. 44167 STATE OF FLORIDA PROFESSIONAL ENGINEER

P.E. SEAL/SIGNATURE/DATE

JAMBS CONNECTIONS AT INSIDE CORNER (PLAN)

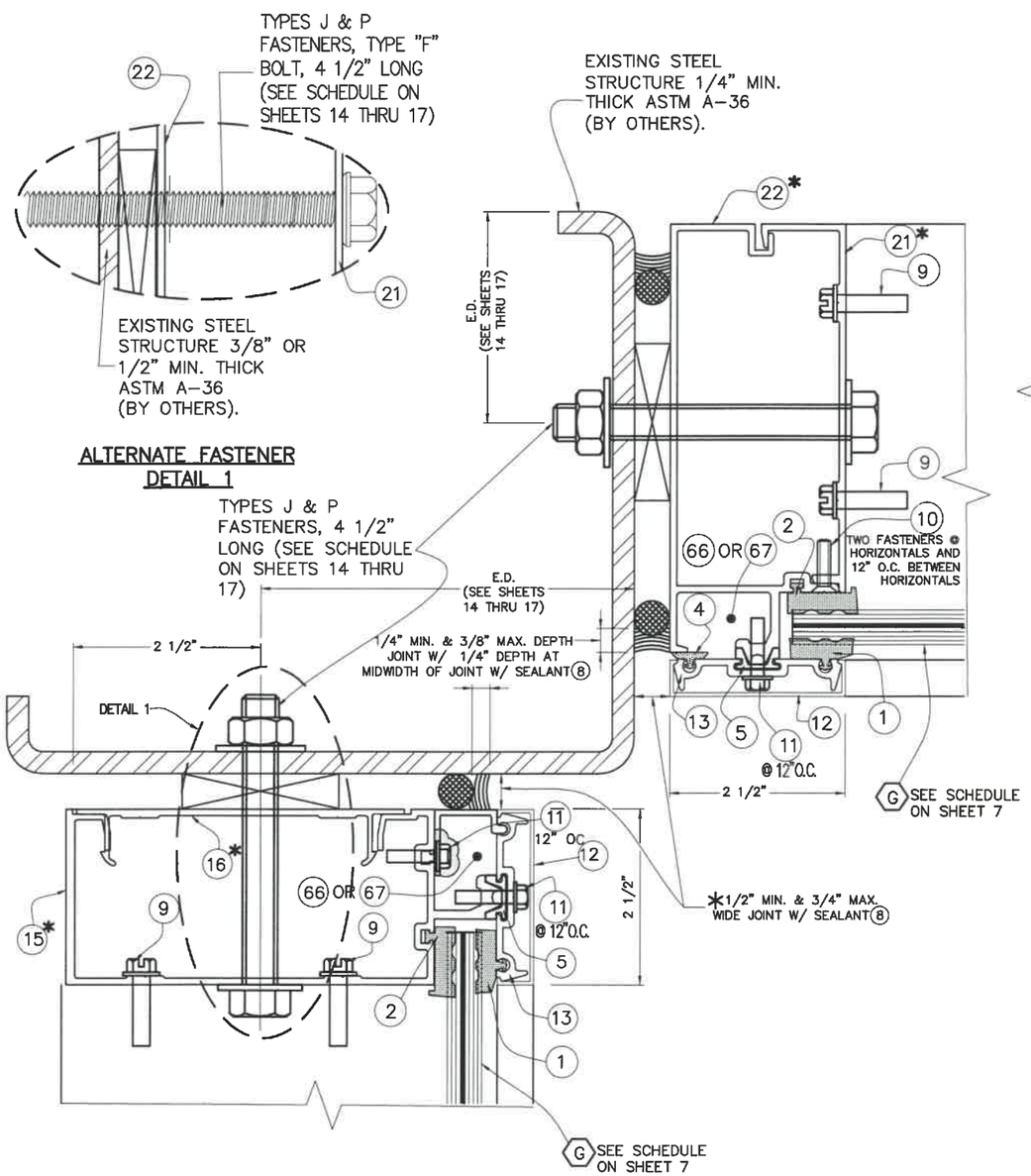

8, 9A @ INSIDE CORNER
JAMB TO EXISTING STEEL (PLAN)

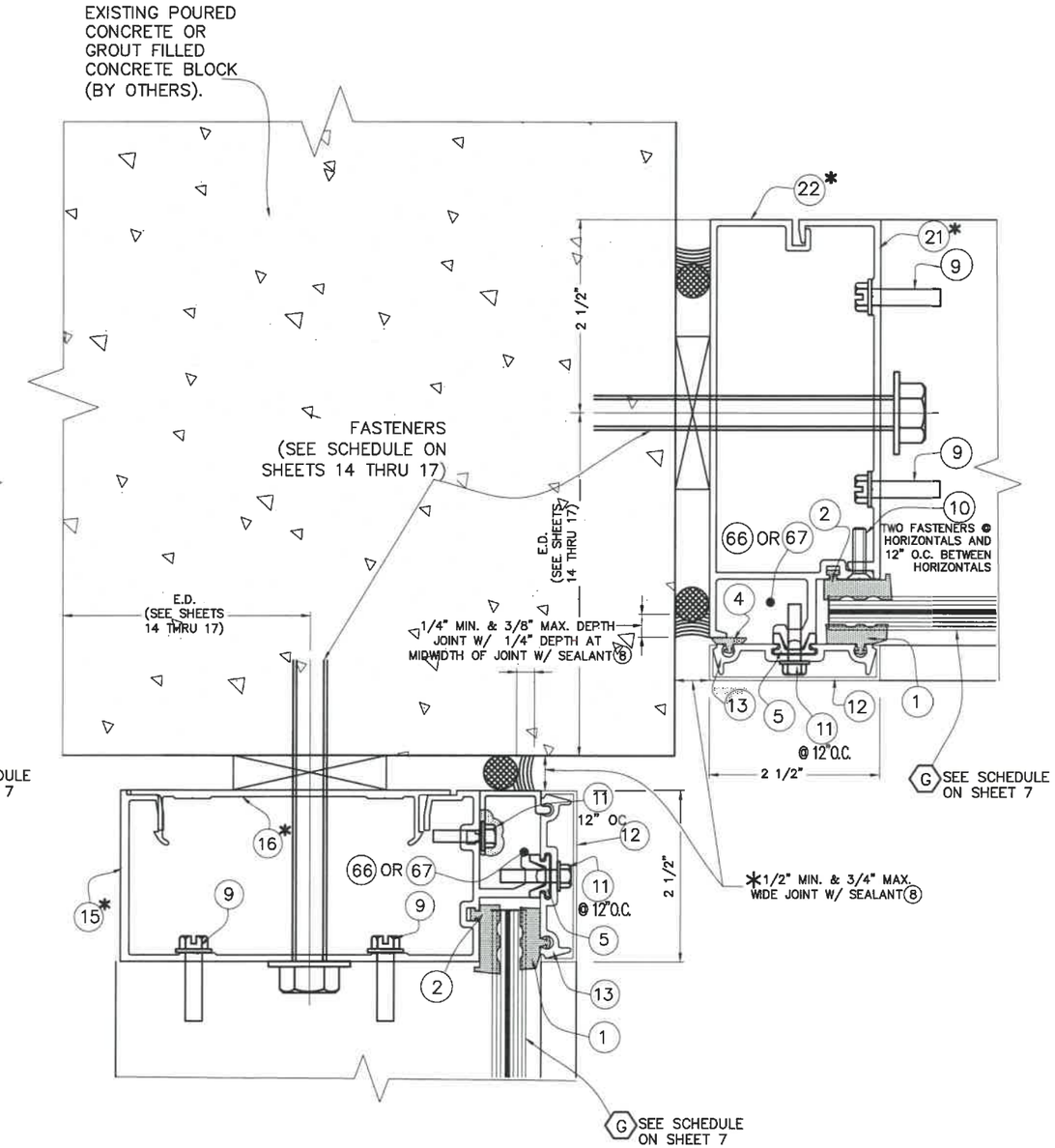

8, 9A @ INSIDE CORNER
JAMB TO POURED CONCRETE (PLAN)

*** JAMBS MAY BE (15) + (16) OR (21) + (22) INTERCHANGABLE**

* NOTE: ABOVE INDICATED MAXIMUM AND MINIMUM VALUES FOR SPECIFIED SEALANT VERTICAL JOINT WIDTH AT JAMBS CONNECTED TO WALL HAVE BEEN DETERMINED ONLY TAKING INTO CONSIDERATION THE ACTUAL MOVEMENT OF GLASS WALL AT JAMBS DUE TO THERMAL, WIND AND ITS OWN CONSTRUCTION TOLERANCE, AND NOT PERFORMANCE FACTORS FROM THE SURROUNDING STRUCTURE.

FLORIDA BUILDING CODE (Non High Velocity Hurricane Zone)

HR-250DG CAPTURED DRY GLAZED CURTAIN WALL SYSTEM
LARGE MISSILE IMPACT LAMINATED GLASS

Oldcastle BuildingEnvelope™
803 Airport Rd - Terrell, TX 75160
www.OldcastleBE.com - Phone 800-869-4567

REV. No	DESCRIPTION	DATE	REV. No	DESCRIPTION	DATE
1	-	-	3	-	-
2	-	-	4	-	-

F.R.L
DRAWN BY:

05/13/2021
DATE

21-068
DRAWING No

SHEET 24 OF 36

©2021 TILTECO, INC

TILTECO INC.
TILLIT TESTING & ENGINEERING COMPANY
6355 N.W. 36th. St., Ste. 305, VIRGINIA GARDENS, FL 33166
Phone : (305)871-1530 . Fax : (305)871-1531
e-mail: tilteco@aol.com
CA-0006719
WALTER A. TILLIT Jr. P.E.
FLORIDA Lic. # 44167

P.E. SEAL/SIGNATURE/DATE

WALTER A. TILLIT JR. ★ LICENSE No. 44167 ★ STATE OF FLORIDA ★ PROFESSIONAL ENGINEER

SILL & HEAD CONNECTION DETAILS FOR SINGLE SPAN & SILL CONNECTION DETAIL FOR TWIN SPAN (PLANS)

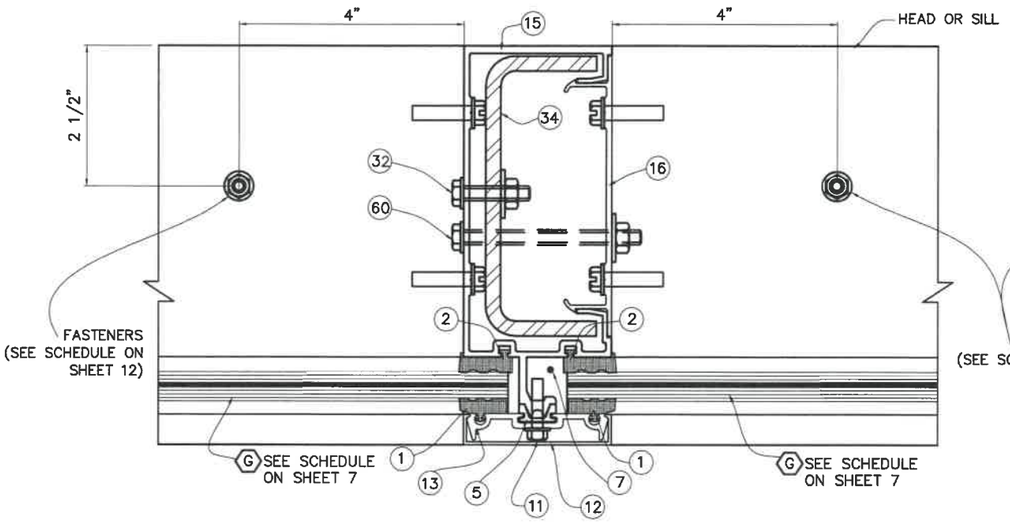

1
CONNECTION AT STANDARD MULLION

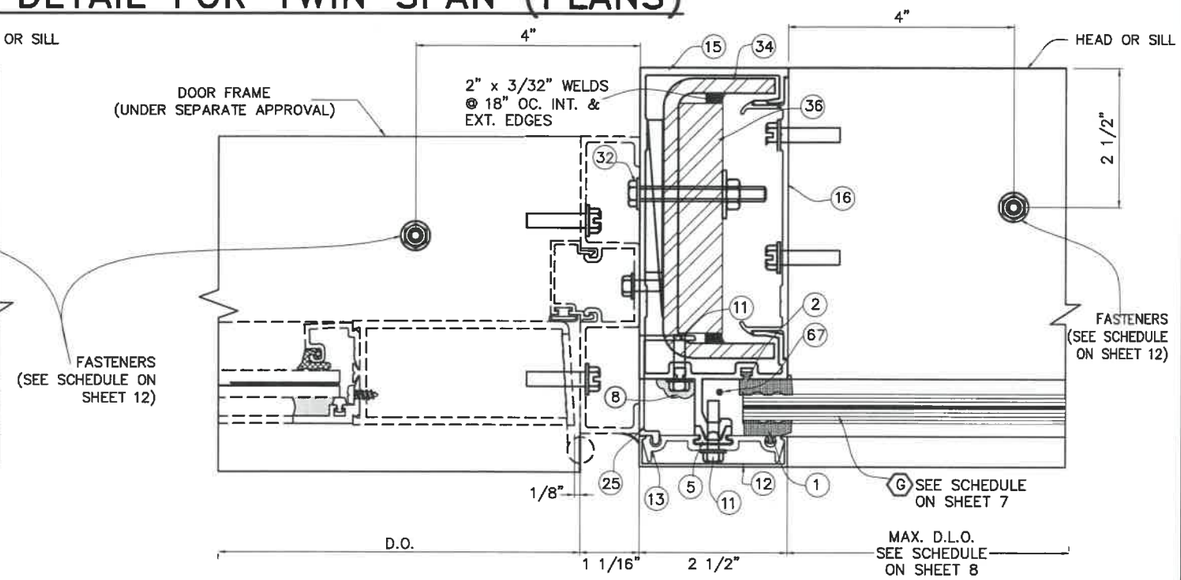

3
CONNECTION AT DOOR JAMB MULLION

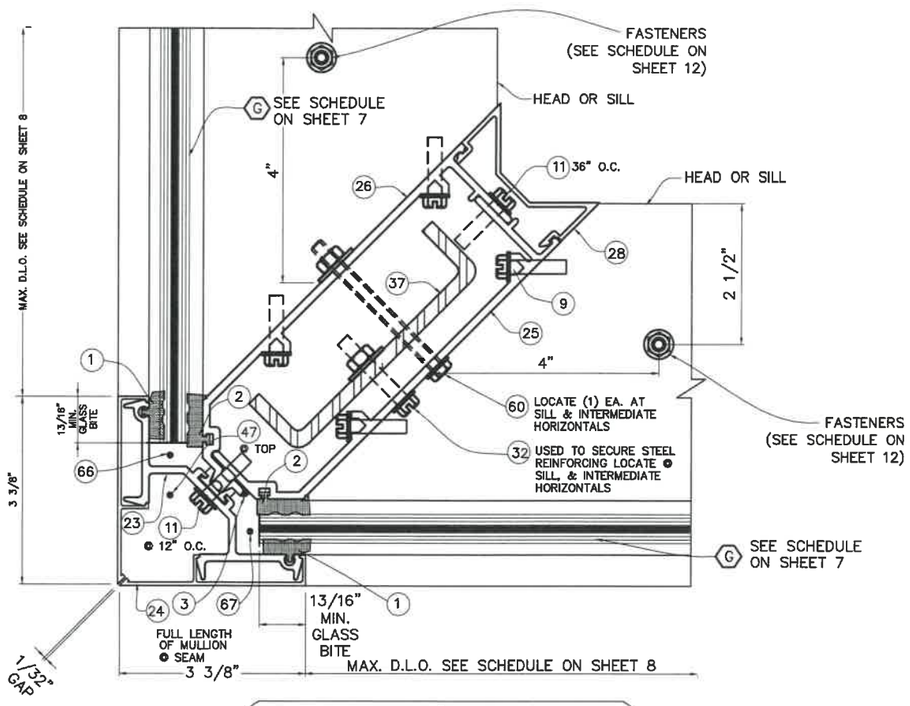

2
CONNECTION AT CORNER MULLION

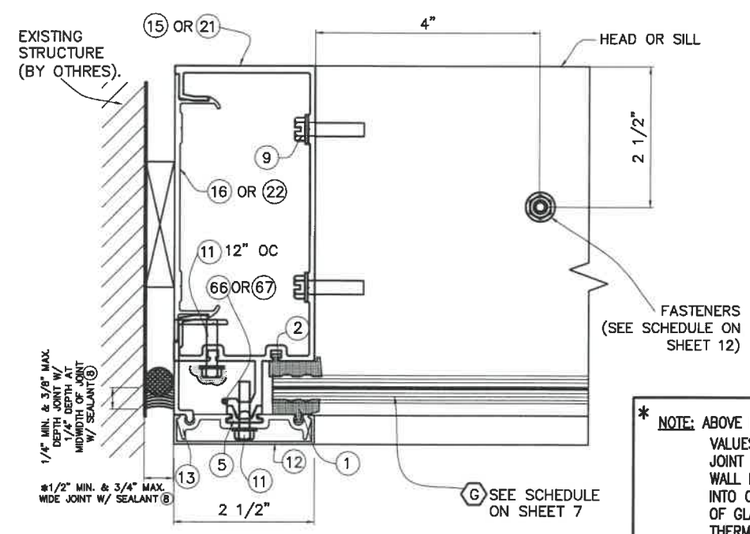

4
CONNECTION AT JAMBS

* NOTE: ABOVE INDICATED MAXIMUM AND MINIMUM VALUES FOR SPECIFIED SEALANT VERTICAL JOINT WIDTH AT JAMBS CONNECTED TO WALL HAVE BEEN DETERMINED ONLY TAKING INTO CONSIDERATION THE ACTUAL MOVEMENT OF GLASS WALL AT JAMBS DUE TO THERMAL, WIND AND ITS OWN CONSTRUCTION TOLERANCE, AND NOT PERFORMANCE FACTORS FROM THE SURROUNDING STRUCTURE.

FLORIDA BUILDING CODE (Non High Velocity Hurricane Zone)

HR-250DG CAPTURED DRY GLAZED CURTAIN WALL SYSTEM
LARGE MISSILE IMPACT LAMINATED GLASS

F.R.L
DRAWN BY:

05/13/2021
DATE

21-068
DRAWING No

SHEET 25 OF 36

Oldcastle BuildingEnvelope™
803 Airport Rd - Terrell, TX 75160
www.OldcastleBE.com - Phone 800-869-4567

REV. No	DESCRIPTION	DATE	REV. No	DESCRIPTION	DATE
1	-	-	3	-	-
2	-	-	4	-	-

©2021 TILTECO, INC

TILTECO INC.
TILLIT TESTING & ENGINEERING COMPANY
6355 N.W. 36th. St., Ste. 305, VIRGINIA GARDENS, FL 33166
Phone : (305)871-1530 , Fax : (305)871-1531
e-mail: tilteco@aol.com
CA-0006719
WALTER A. TILLIT Jr. P.E.
FLORIDA Lic. # 44167

P.E. SEAL/SIGNATURE/DATE

WALTER A. TILLIT JR. LICENSE No. 44167 STATE OF FLORIDA PROFESSIONAL ENGINEER

OPTION #1 FOR HEAD CONNECTION OF TWIN SPAN STANDARD MULLIONS WITH (1) 61

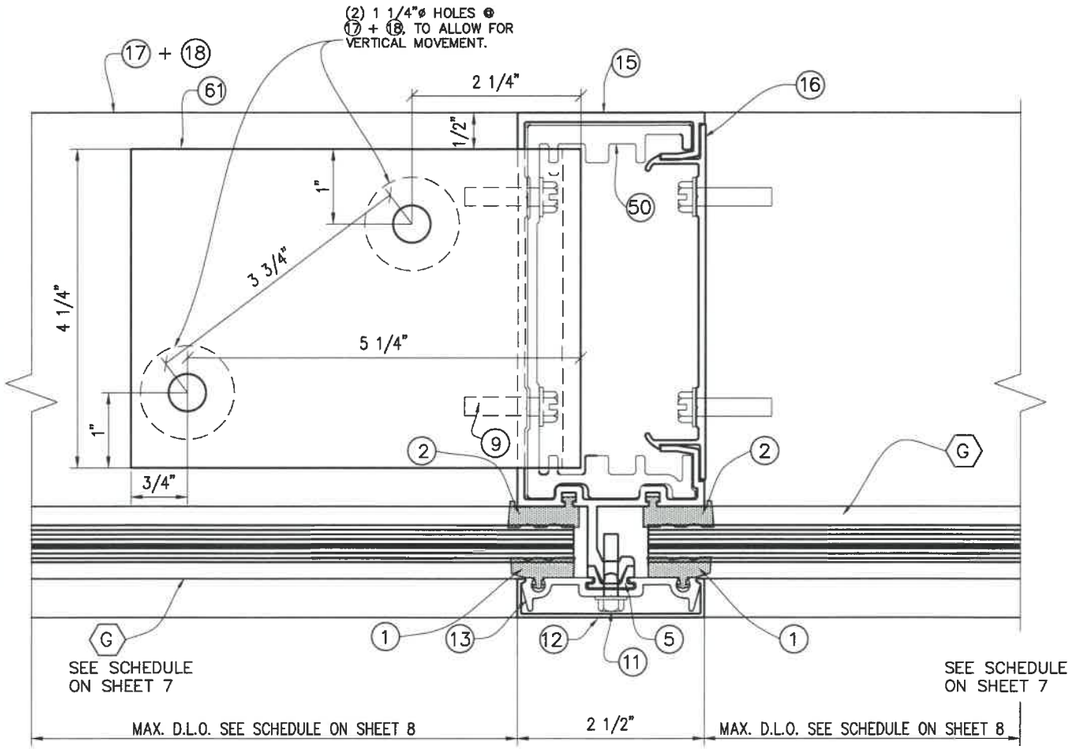

1

17
HEAD ANCHOR (PLAN)

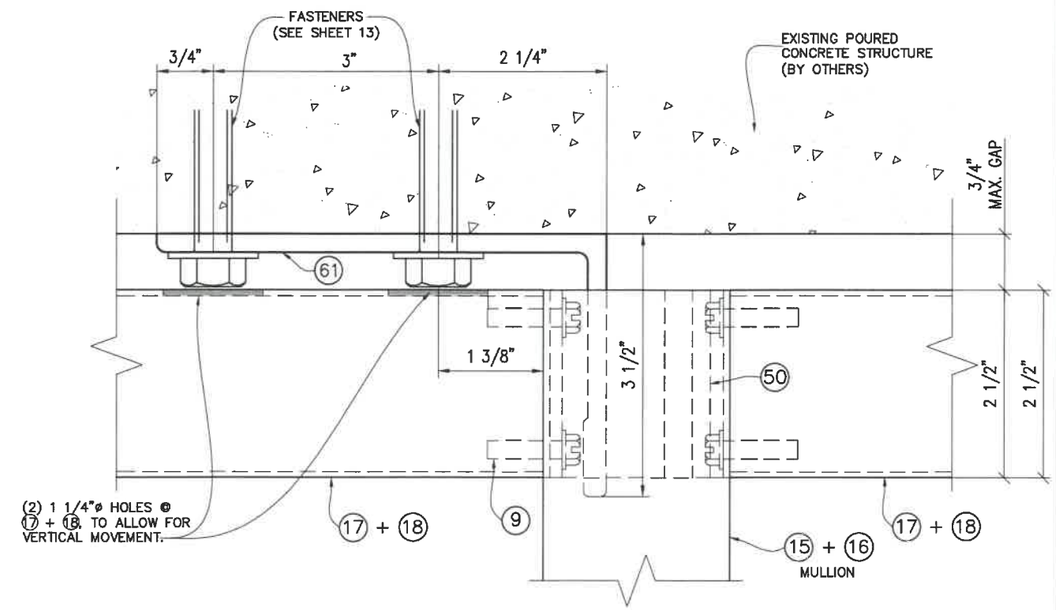

TO EXISTING POURED CONCRETE STRUCTURE

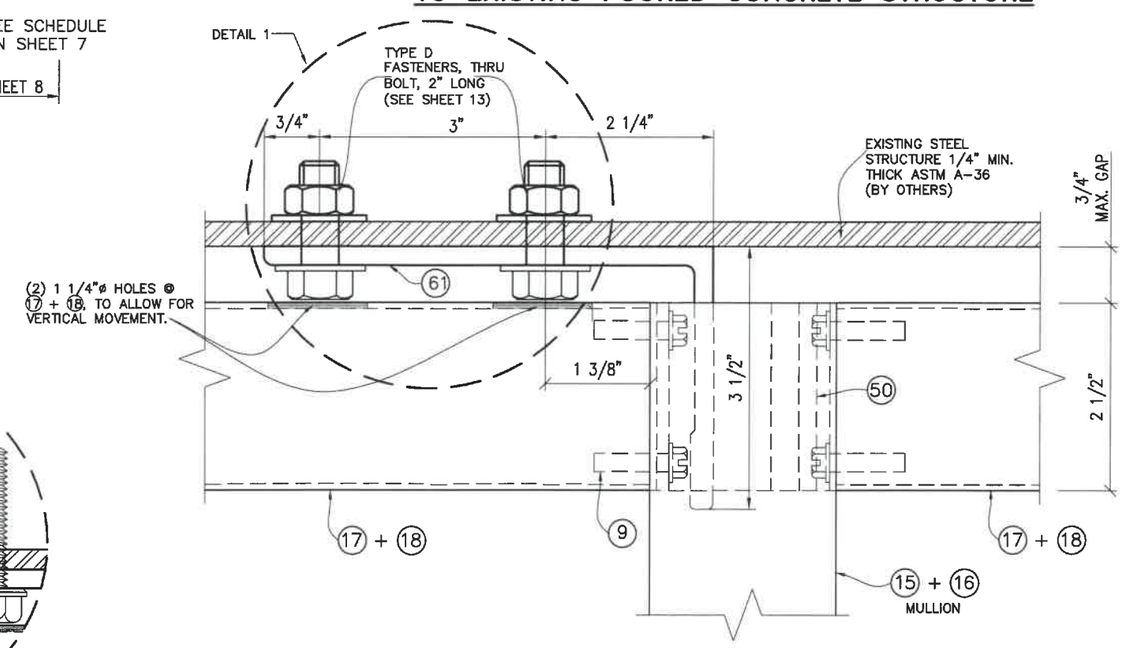

TO EXISTING STEEL STRUCTURE

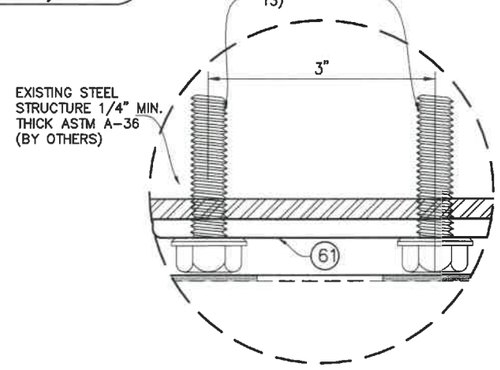

ALTERNATE FASTENER
DETAIL 1

EXTERIOR ELEVATIONS 1

FLORIDA BUILDING CODE (Non High Velocity Hurricane Zone)

HR-250DG CAPTURED DRY GLAZED CURTAIN WALL SYSTEM
LARGE MISSILE IMPACT LAMINATED GLASS

F.R.L
DRAWN BY:

05/13/2021
DATE

21-068
DRAWING No

SHEET 26 OF 36

Oldcastle BuildingEnvelope™
803 Airport Rd - Terrell, TX 75160
www.OldcastleBE.com - Phone 800-869-4567

REV. No	DESCRIPTION	DATE	REV. No	DESCRIPTION	DATE
1	-	-	3	-	-
2	-	-	4	-	-

©2021 TILTECO, INC

TILTECO INC.
TILLIT TESTING & ENGINEERING COMPANY
6355 N.W. 36th. St., Ste. 305, VIRGINA GARDENS, FL 33166
Phone : (305)871-1530 , Fax : (305)871-1531
e-mail: tilteco@aol.com
CA-0006719
WALTER A. TILLIT Jr. P.E.
FLORIDA Lic. # 44167

P.E. SEAL/SIGNATURE/DATE

WALTER A. TILLIT JR. LICENSE No. 44167 STATE OF FLORIDA PROFESSIONAL ENGINEER

OPTION #2 FOR HEAD CONNECTION OF TWIN SPAN STANDARD MULLIONS WITH (61) & (61A)

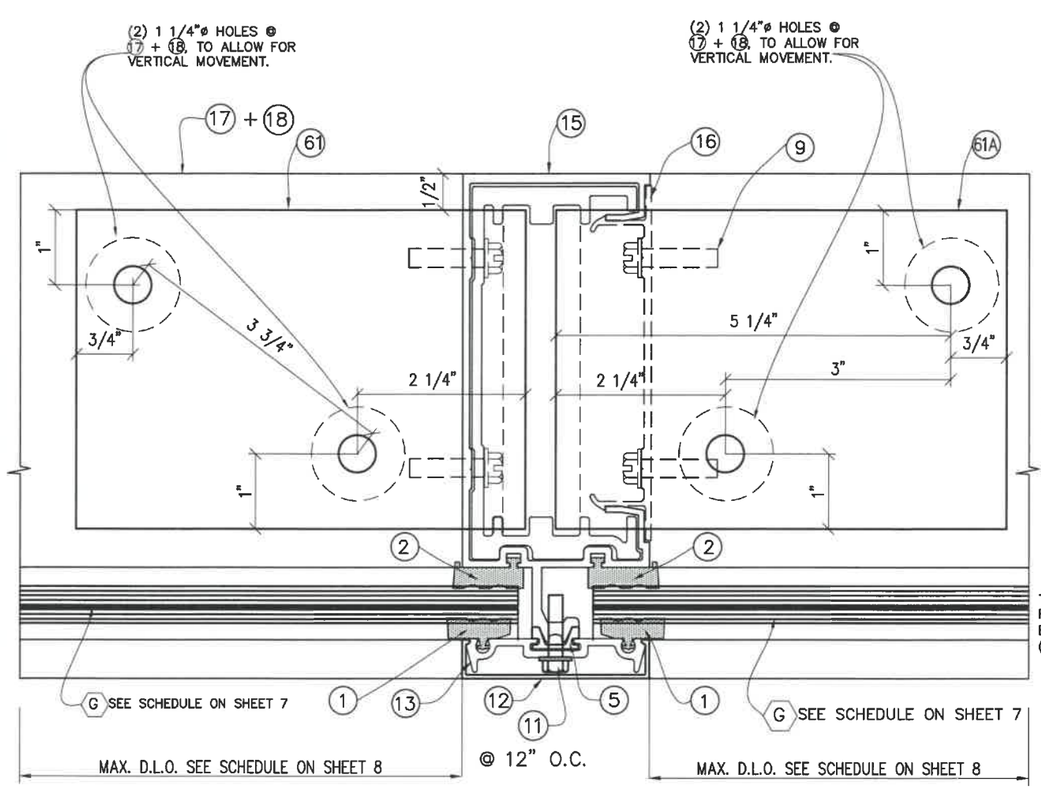

1

17A
HEAD ANCHOR (PLAN)

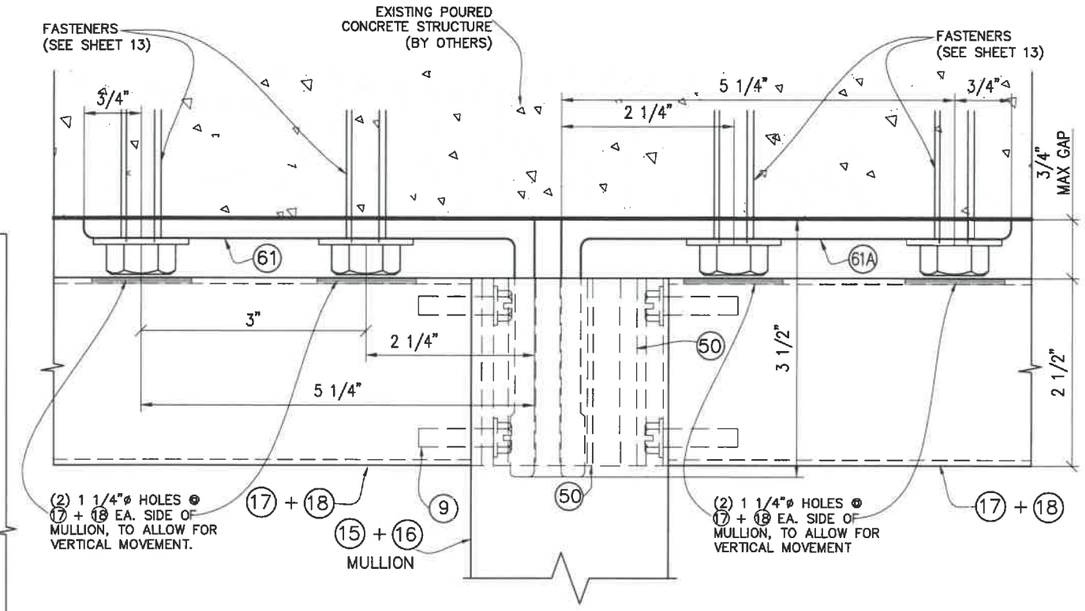

TO EXISTING POURED CONCRETE STRUCTURE

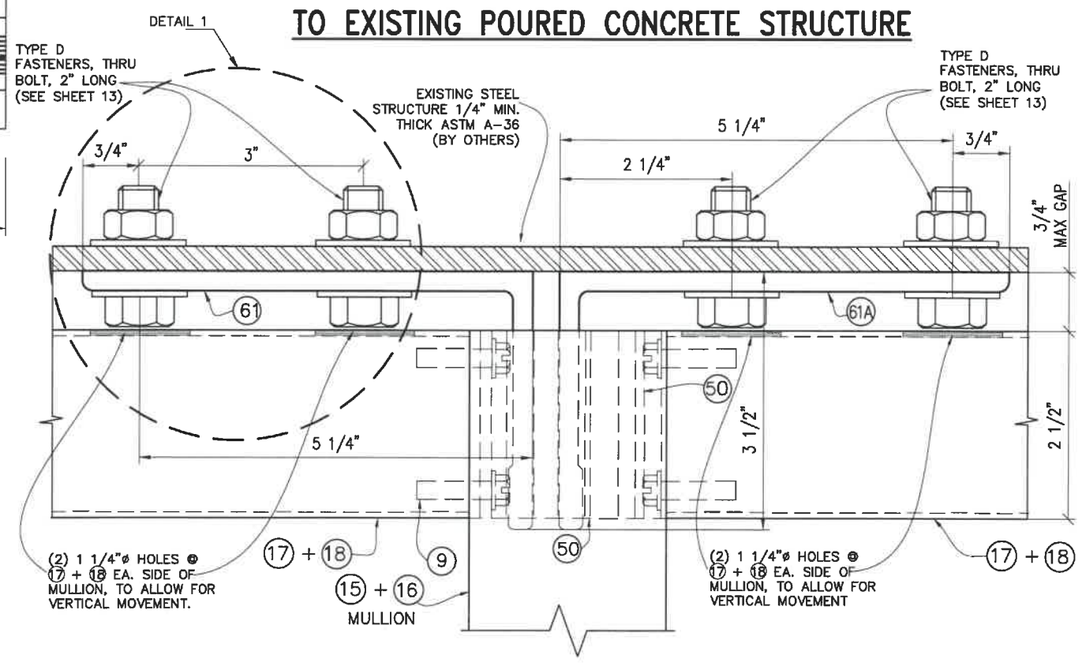

TO EXISTING STEEL STRUCTURE

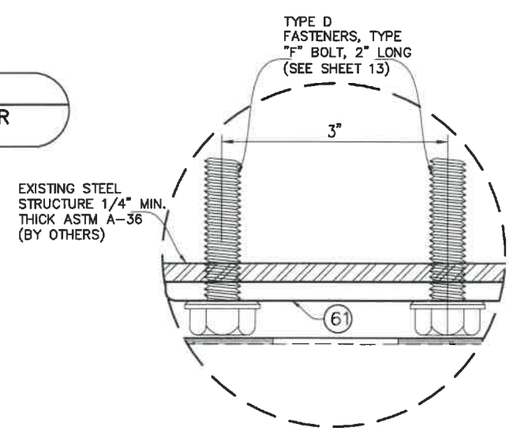

ALTERNATE FASTENER DETAIL 1

EXTERIOR ELEVATIONS 1

FLORIDA BUILDING CODE (Non High Velocity Hurricane Zone)

HR-250DG CAPTURED DRY GLAZED CURTAIN WALL SYSTEM
LARGE MISSILE IMPACT LAMINATED GLASS

Oldcastle BuildingEnvelope™
803 Airport Rd - Terrell, TX 75160
www.OldcastleBE.com - Phone 800-869-4567

REV. No	DESCRIPTION	DATE	REV. No	DESCRIPTION	DATE
1	-	-	3	-	-
2	-	-	4	-	-

F.R.L. DRAWN BY:
05/13/2021 DATE
21-068 DRAWING No
SHEET 27 OF 36

©2021 TILTECO, INC

TILTECO INC.
TILLIT TESTING & ENGINEERING COMPANY
6355 N.W. 36th. St., Ste. 305, VIRGINIA GARDENS, FL 33166
Phone : (305)871-1530 . Fax : (305)871-1531
e-mail: tilteco@aol.com
CA-0006719
WALTER A. TILLIT Jr. P.E.
FLORIDA Lic. # 44167

P.E. SEAL/SIGNATURE/DATE

WALTER A. TILLIT JR. LICENSE No. 44167 STATE OF FLORIDA PROFESSIONAL ENGINEER

HEAD CONNECTION OF TWIN SPAN JAMBS

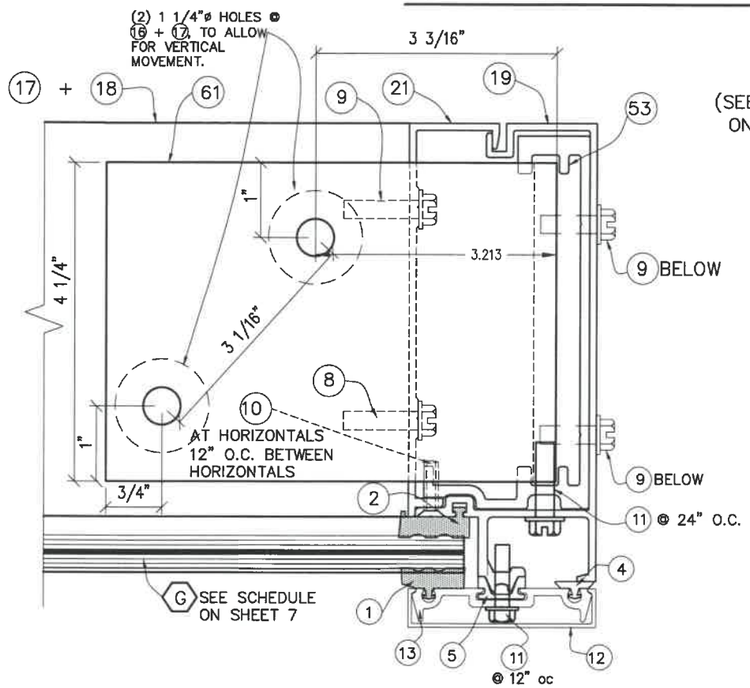

1

18
JAMB HEAD ANCHOR PLAN

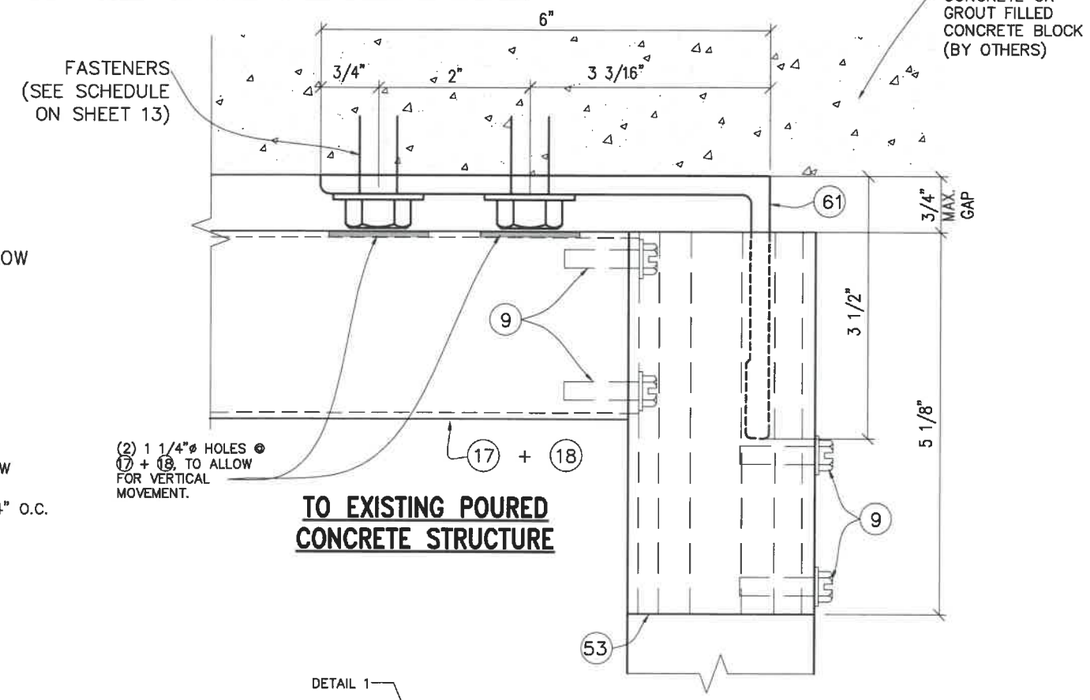

TO EXISTING POURED CONCRETE STRUCTURE

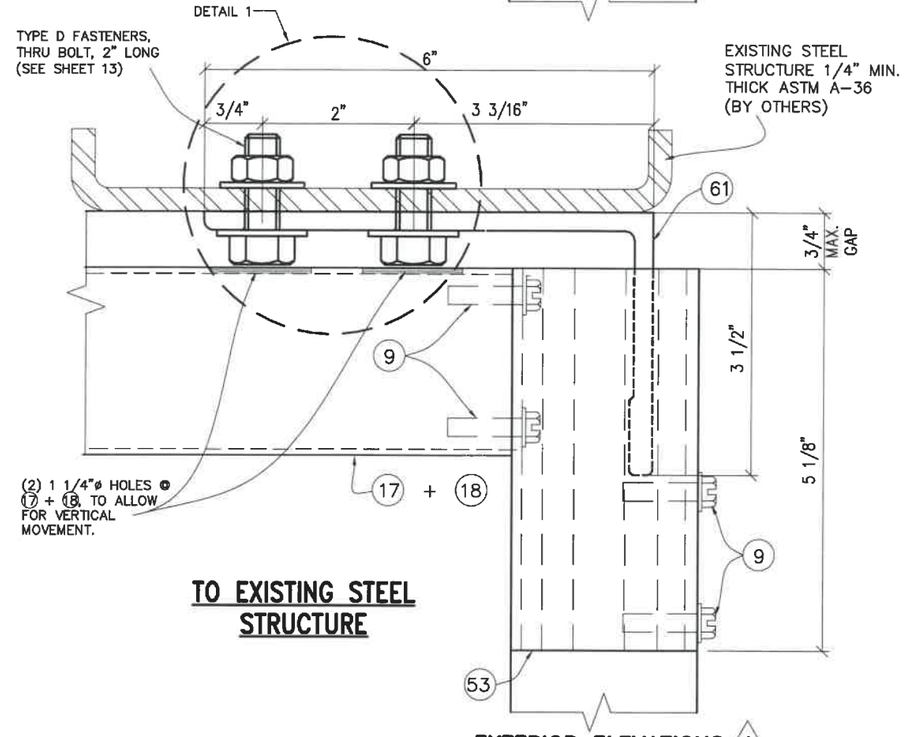

TO EXISTING STEEL STRUCTURE

EXTERIOR ELEVATIONS 1

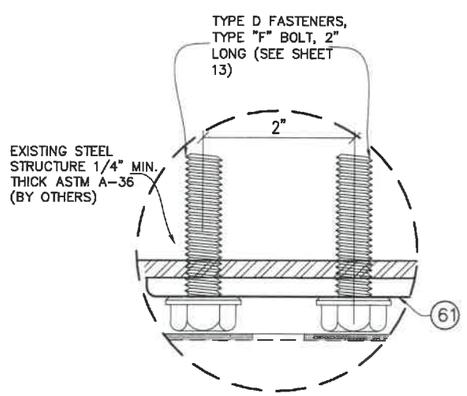

ALTERNATE FASTENER DETAIL 1

FLORIDA BUILDING CODE (Non High Velocity Hurricane Zone)

©2021 TILTECO, INC

HR-250DG CAPTURED DRY GLAZED CURTAIN WALL SYSTEM
LARGE MISSILE IMPACT LAMINATED GLASS

Oldcastle BuildingEnvelope™
803 Airport Rd - Terrell, TX 75160
www.OldcastleBE.com - Phone 800-869-4567

REV. No	DESCRIPTION	DATE	REV. No	DESCRIPTION	DATE
1	-	-	3	-	-
2	-	-	4	-	-

F.R.L
DRAWN BY:

05/13/2021
DATE

21-068
DRAWING No

SHEET 28 OF 36

TILTECO INC.
TILLIT TESTING & ENGINEERING COMPANY
6355 N.W. 36th. St., Ste. 305, VIRGINIA GARDENS, FL 33166
Phone : (305)871-1531 , Fax : (305)871-1530
e-mail: tilteco@aol.com
CA-0006719
WALTER A. TILLIT Jr. P.E.
FLORIDA Lic. # 44167

WALTER A. TILLIT JR. LICENSE No. 44167 STATE OF FLORIDA PROFESSIONAL ENGINEER

P.E. SEAL/SIGNATURE/DATE

HEAD CONNECTION DETAIL FOR TWIN SPAN CORNER MULLION

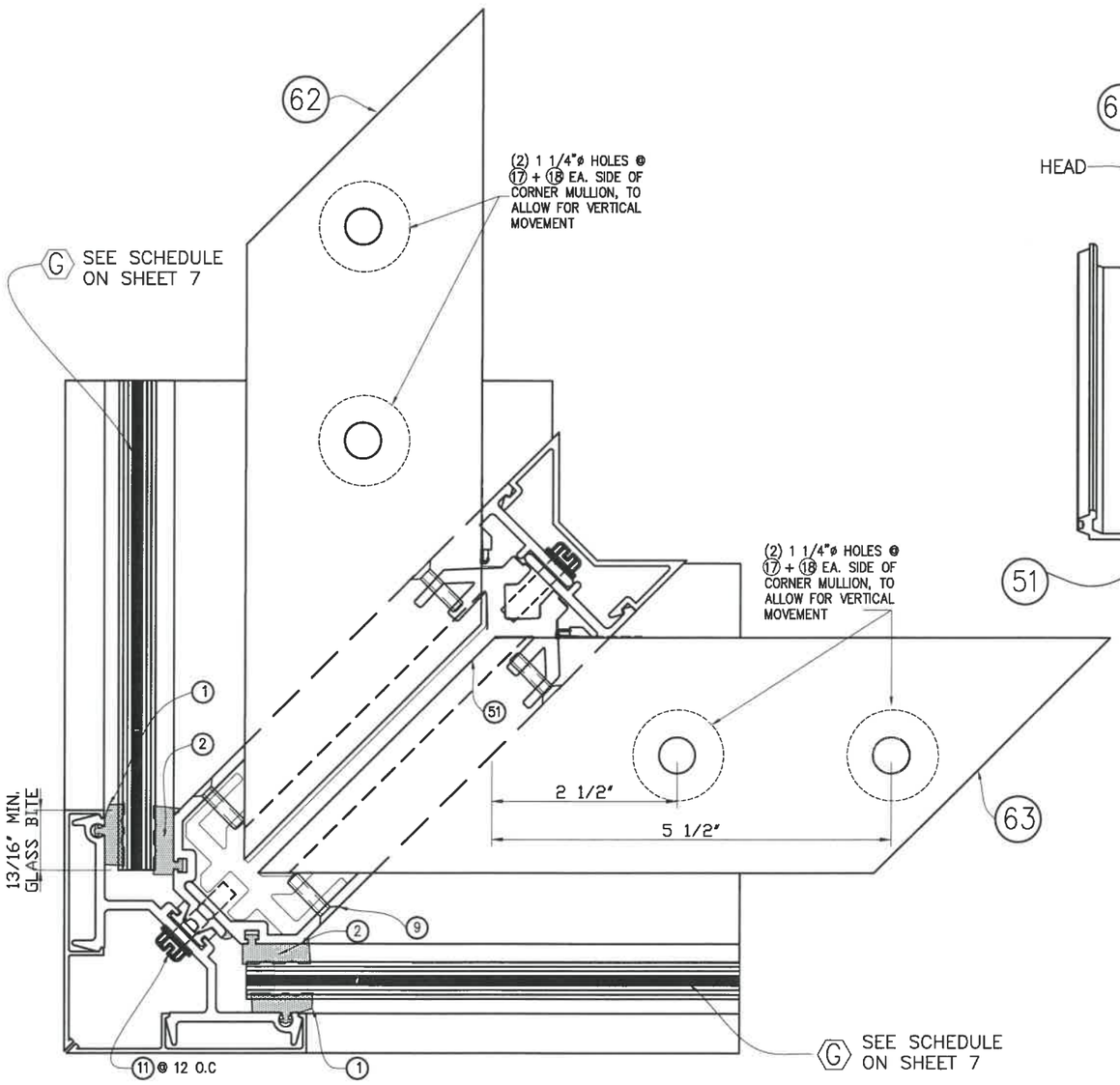

19
CORNER HEAD ANCHOR (PLAN)

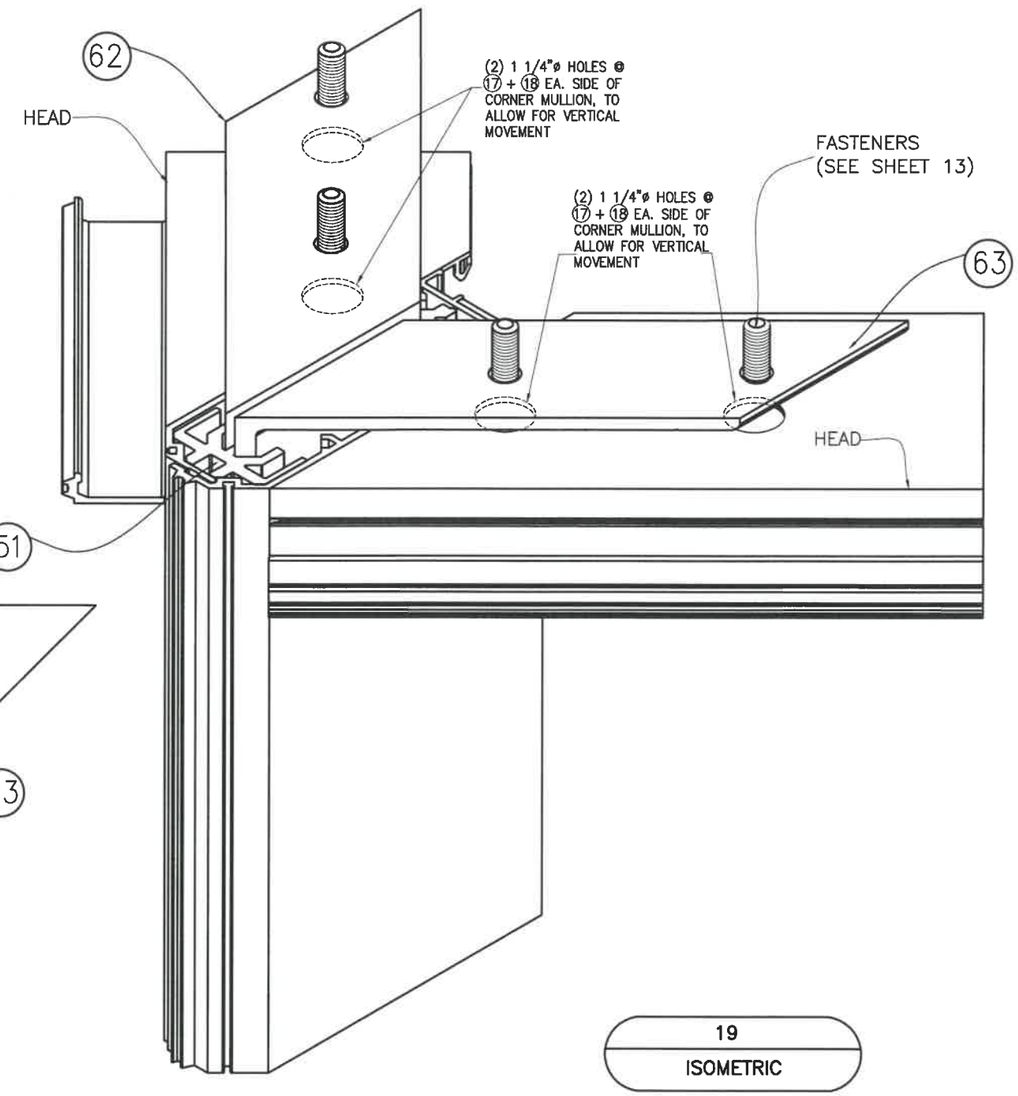

19
ISOMETRIC

FLORIDA BUILDING CODE (Non High Velocity Hurricane Zone)

HR-250DG CAPTURED DRY GLAZED CURTAIN WALL SYSTEM
LARGE MISSILE IMPACT LAMINATED GLASS

F.R.L. DRAWN BY:
05/13/2021 DATE
21-068 DRAWING No

Oldcastle BuildingEnvelope™
803 Airport Rd - Terrell, TX 75160
www.OldcastleBE.com - Phone 800-869-4567

REV. No	DESCRIPTION	DATE	REV. No	DESCRIPTION	DATE
1	-	-	3	-	-
2	-	-	4	-	-

SHEET 29 OF 36

©2021 TILTECO, INC

TILTECO INC.
TILLIT TESTING & ENGINEERING COMPANY
6355 N.W. 36th. St., Ste. 305, VIRGINIA GARDENS, FL 33166
Phone : (305)871-1530 , Fax : (305)871-1531
e-mail: tilteco@aol.com
CA-0006719
WALTER A. TILLIT Jr. P.E.
FLORIDA Lic. # 44167

P.E. SEAL/SIGNATURE/DATE

WALTER A. TILLIT JR. LICENSE No. 44167 STATE OF FLORIDA PROFESSIONAL ENGINEER

MULLION AND JAMB SPLICES AT TWIN SPAN ONLY (PLAN)

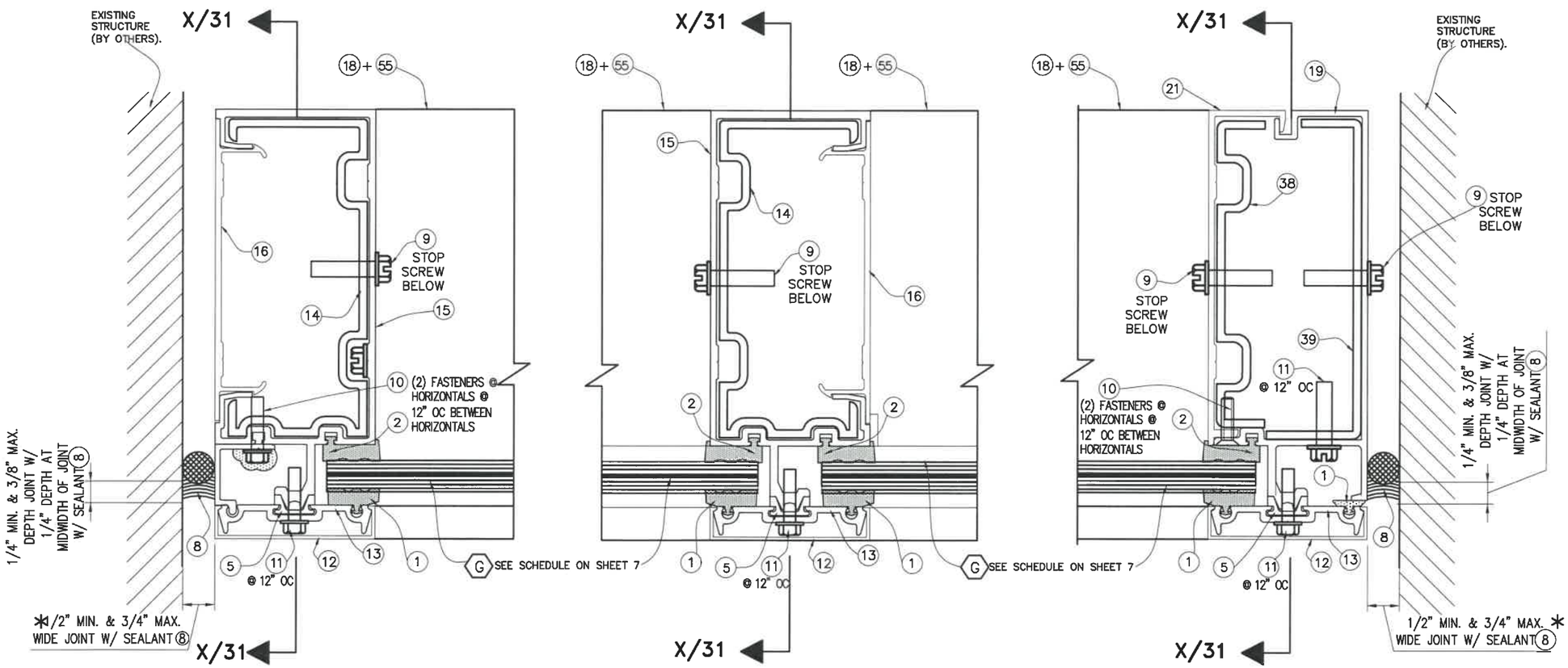

15A
SPLICE JOINT @ STANDARD JAMB W/ 14

15B
SPLICE JOINT @ STANDARD MULLION W/ 14

15C
SPLICE JOINT @ 2 PART JAMB W/ 38+39

* NOTE: ABOVE INDICATED MAXIMUM AND MINIMUM VALUES FOR SPECIFIED SEALANT VERTICAL JOINT WIDTH AT JAMBS CONNECTED TO WALL HAVE BEEN DETERMINED ONLY TAKING INTO CONSIDERATION THE ACTUAL MOVEMENT OF GLASS WALL AT JAMBS DUE TO THERMAL, WIND AND ITS OWN CONSTRUCTION TOLERANCE, AND NOT PERFORMANCE FACTORS FROM THE SURROUNDING STRUCTURE.

FLORIDA BUILDING CODE (Non High Velocity Hurricane Zone)

HR-250DG CAPTURED DRY GLAZED CURTAIN WALL SYSTEM
LARGE MISSILE IMPACT LAMINATED GLASS

Oldcastle BuildingEnvelope™
803 Airport Rd - Terrell, TX 75160
www.OldcastleBE.com - Phone 800-869-4567

REV. No	DESCRIPTION	DATE	REV. No	DESCRIPTION	DATE
1	-	-	3	-	-
2	-	-	4	-	-

F.R.L
DRAWN BY:

05/13/2021
DATE

21-068
DRAWING No

SHEET 30 OF 36

©2021 TILTECO, INC

TILTECO INC.
TILLIT TESTING & ENGINEERING COMPANY
6355 N.W. 36th. St., Ste. 305, VIRGINIA GARDENS, FL 33166
Phone : (305)871-1530 , Fax : (305)871-1531
e-mail: tilteco@aol.com
CA-0006719
WALTER A. TILLIT Jr. P.E.
FLORIDA Lic. # 44167

WALTER A. TILLIT JR. LICENSE No. 44167 STATE OF FLORIDA PROFESSIONAL ENGINEER

P.E. SEAL/SIGNATURE/DATE

MULLION AND JAMB SPLICES AT TWIN SPAN ONLY (SIDE VIEW)

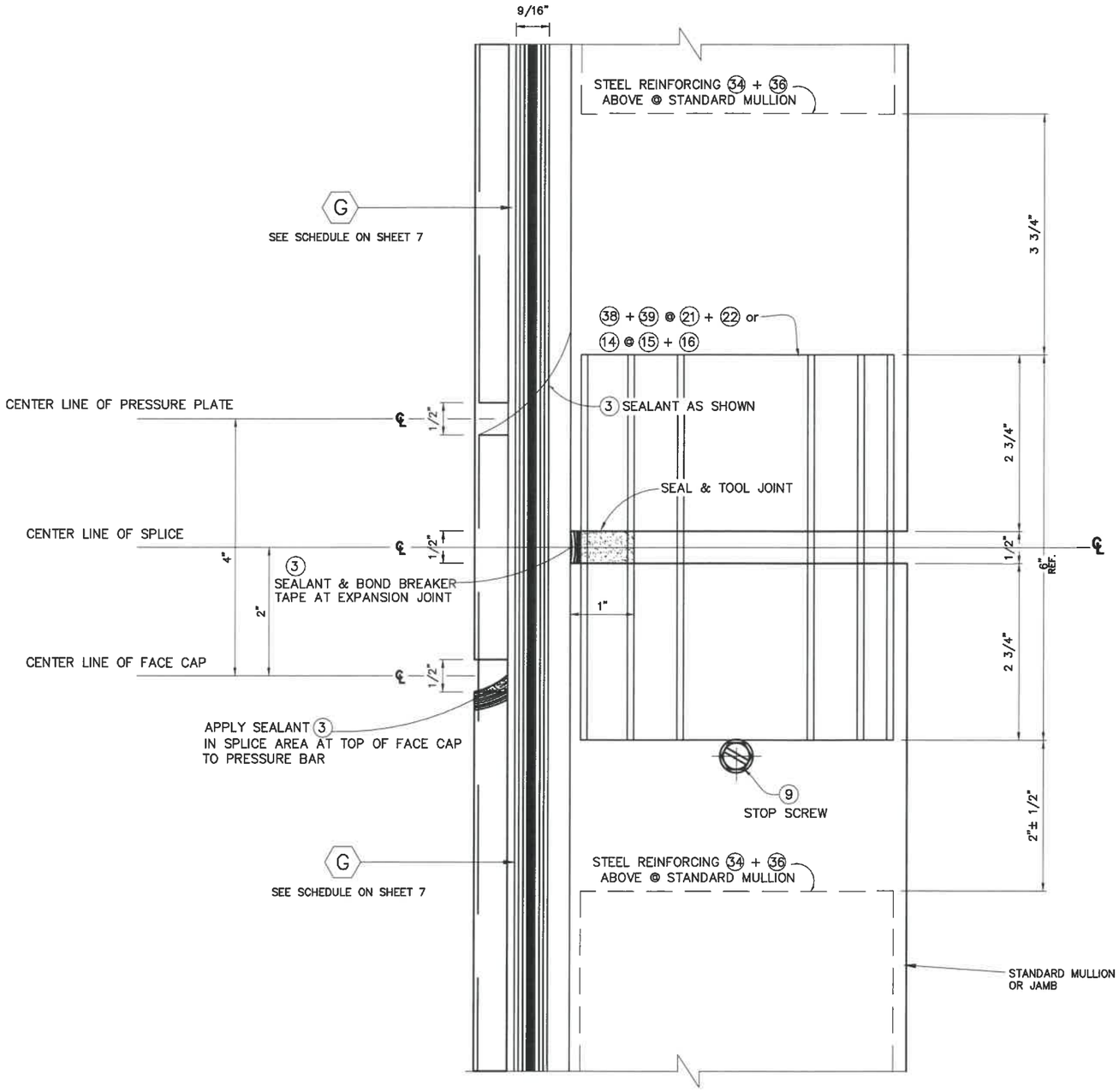

SECTION X–X
SPLICE JOINT @
STD MULLION/JAMB

FLORIDA BUILDING CODE (Non High Velocity Hurricane Zone)

HR-250DG CAPTURED DRY GLAZED
CURTAIN WALL SYSTEM
LARGE MISSILE IMPACT LAMINATED GLASS

F.R.L.
DRAWN BY:

05/13/2021
DATE

21–068
DRAWING No

Oldcastle BuildingEnvelope™
803 Airport Rd - Terrell, TX 75160
www.OldcastleBE.com - Phone 800-869-4567

REV. No	DESCRIPTION	DATE	REV. No	DESCRIPTION	DATE
1	–	–	3	–	–
2	–	–	4	–	–

SHEET 31 OF 36

©2021 TILTECO, INC

TILTECO INC.
TILLIT TESTING & ENGINEERING COMPANY
6355 N.W. 36th. St., Ste. 305, VIRGINIA GARDENS, FL 33166
Phone : (305)871–1530 , Fax : (305)871–1531
e–mail: tilteco@aol.com
CA–0006719
WALTER A. TILLIT Jr. P.E.
FLORIDA Lic. # 44167

P.E. SEAL/SIGNATURE/DATE

WALTER A. TILLIT JR. ENGINEER
LICENSE
No. 44167
STATE OF FLORIDA
PROFESSIONAL ENGINEER

CORNER MULLION SPLICE AT TWIN SPAN (PLAN)

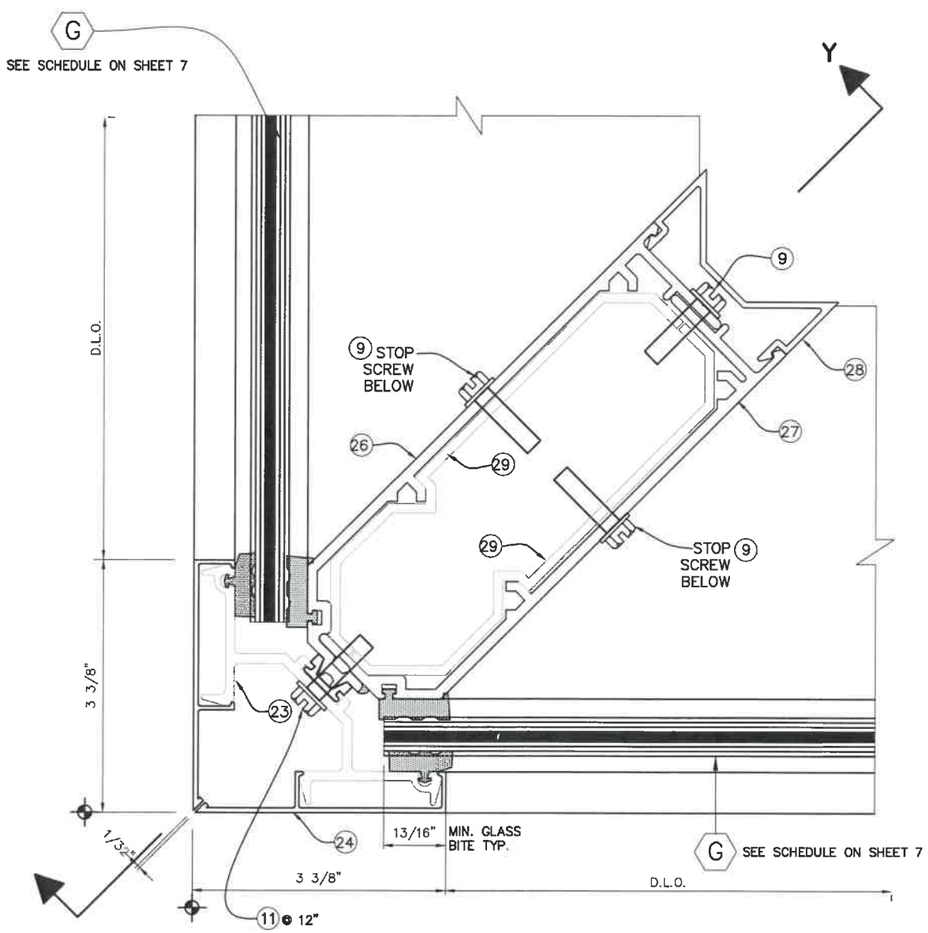

16
SPLICE JOINT @
90 DEG. CORNER
PLAN

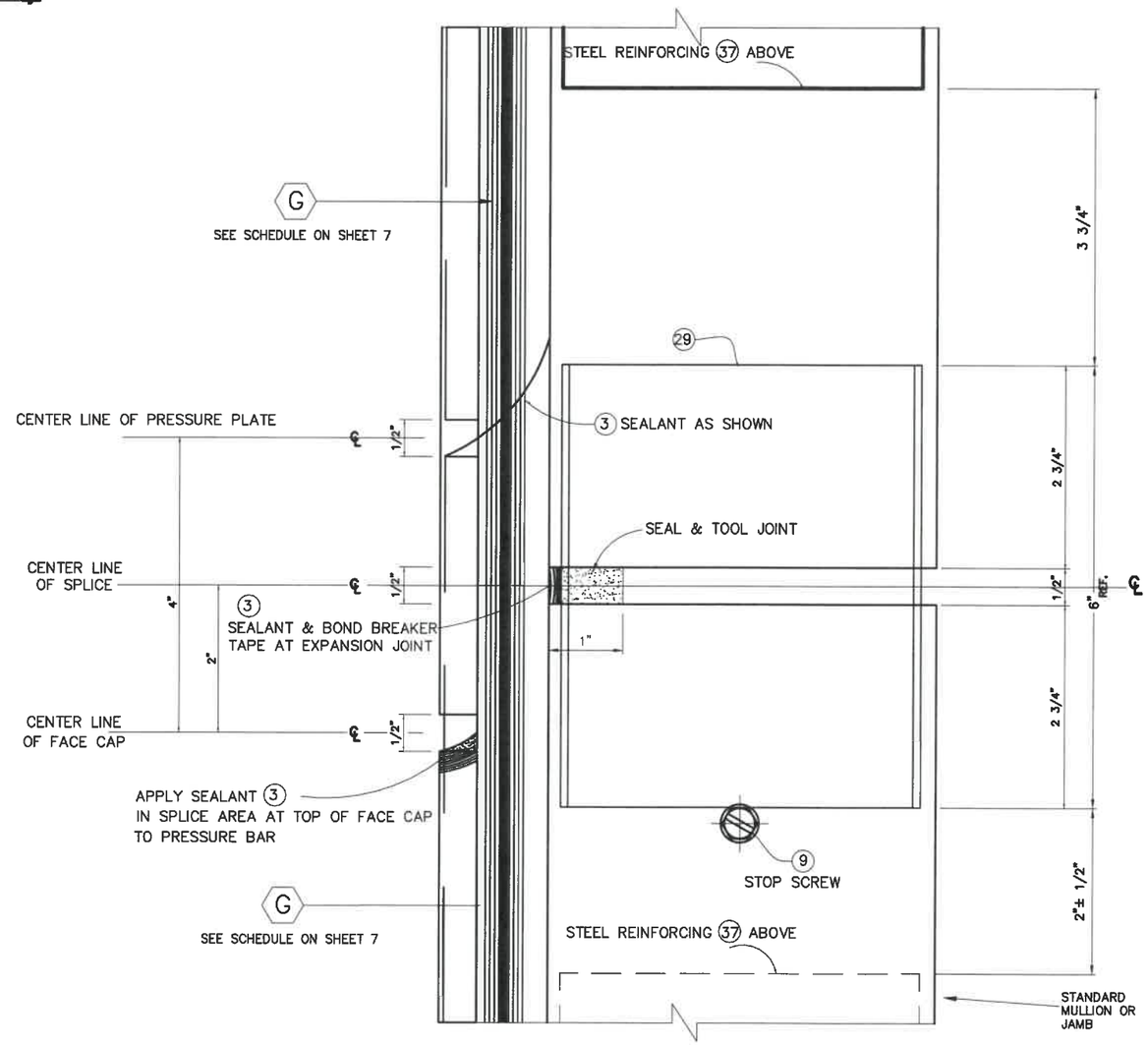

16
SPLICE JOINT @
90 DEG. CORNER
SECTION Y-Y

FLORIDA BUILDING CODE (Non High Velocity Hurricane Zone)

HR-250DG CAPTURED DRY GLAZED CURTAIN WALL SYSTEM
LARGE MISSILE IMPACT LAMINATED GLASS

F.R.L
DRAWN BY:

05/13/2021
DATE

21-068
DRAWING No

SHEET 32 OF 36

Oldcastle BuildingEnvelope™
803 Airport Rd - Terrell, TX 75160
www.OldcastleBE.com - Phone 800-869-4567

REV. No	DESCRIPTION	DATE	REV. No	DESCRIPTION	DATE
1	-	-	3	-	-
2	-	-	4	-	-

©2021 TILTECO, INC

TILTECO INC.
TILLIT TESTING & ENGINEERING COMPANY
6355 N.W. 36th. St., Ste. 305, VIRGINIA GARDENS, FL. 33166
Phone : (305)871-1530 , Fax : (305)871-1531
e-mail: tilteco@aol.com
CA-0006719
WALTER A. TILLIT Jr. P.E.
FLORIDA Lic. # 44167

P.E. SEAL/SIGNATURE/DATE

WALTER A. TILLIT JR. LICENSE No. 44167 STATE OF FLORIDA PROFESSIONAL ENGINEER

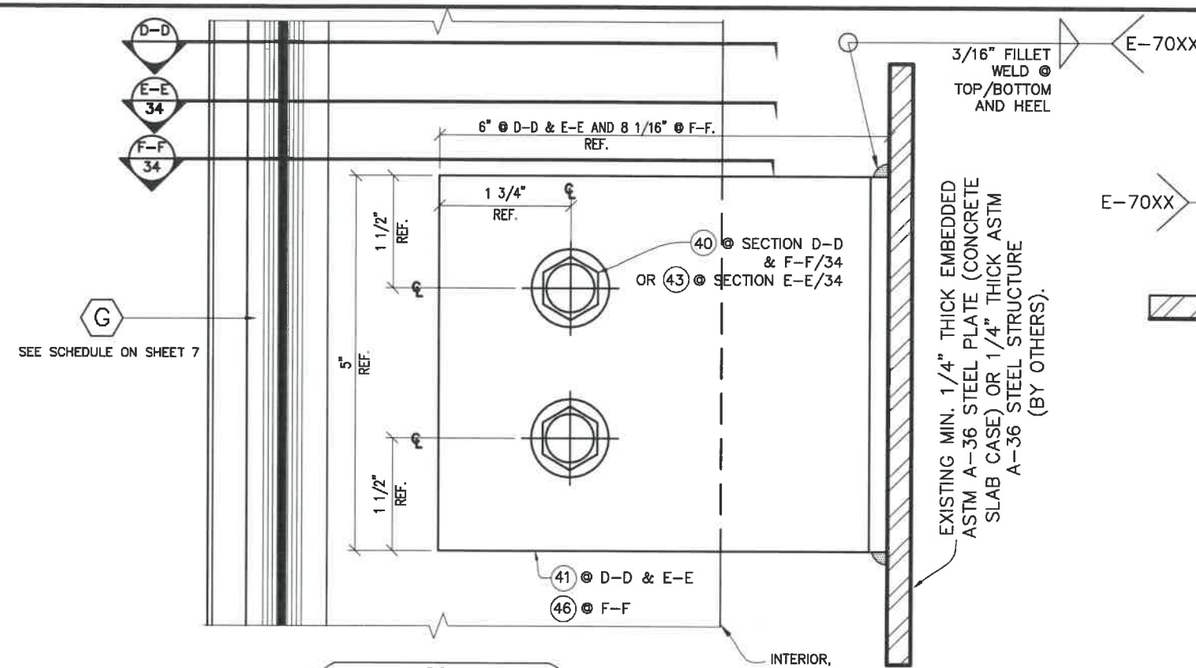

20
DEAD LOAD (D.L.) ANCHOR
SIDE VIEW

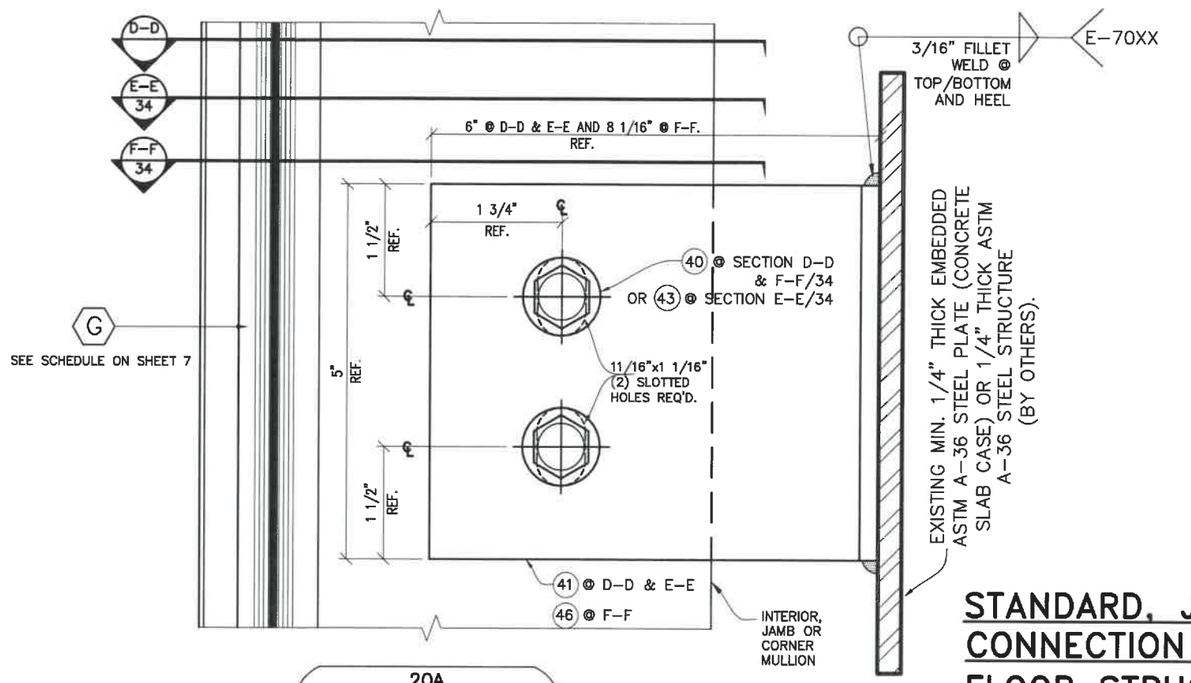

20A
WIND LOAD (W.L.) ANCHOR
SIDE VIEW

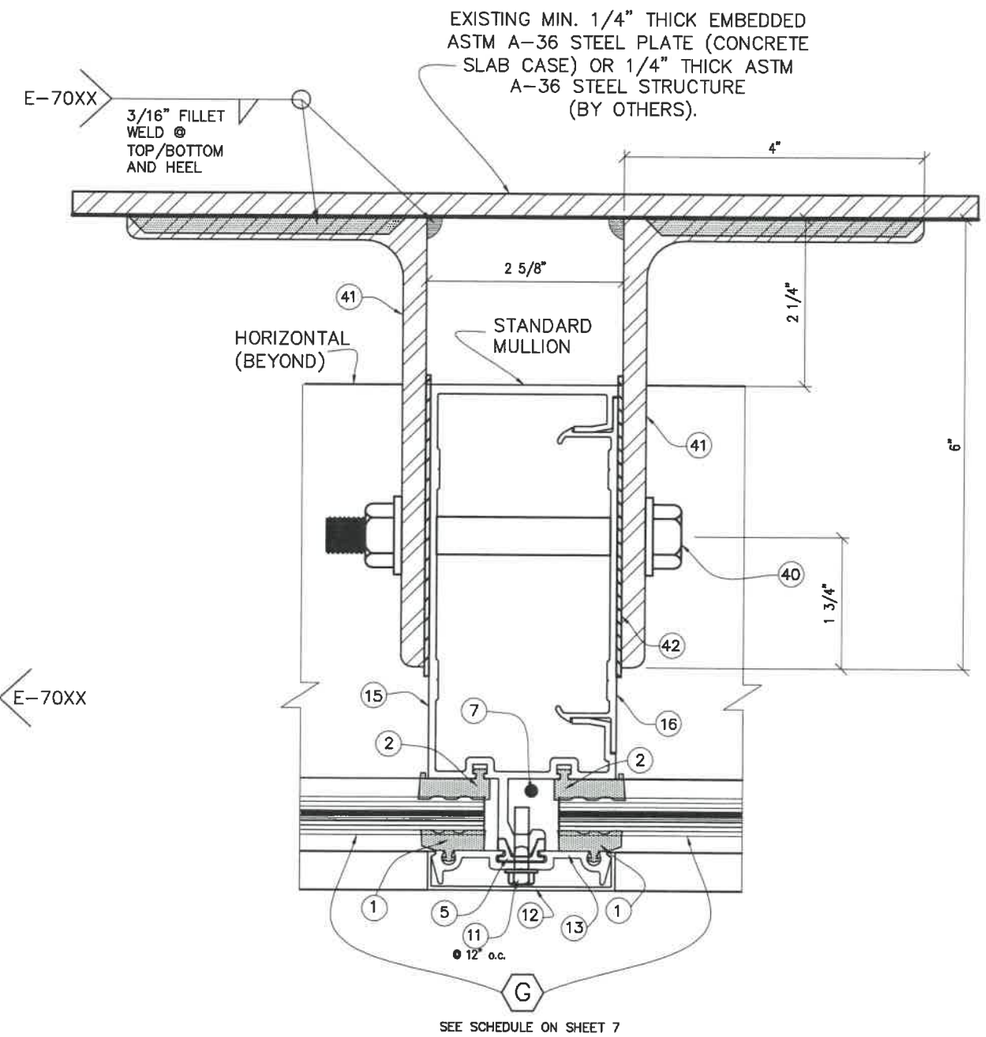

SECTION "D-D"
@ STANDARD
MULLION

STANDARD, JAMB AND CORNER MULLION CONNECTION TO EXISTING INTERMEDIATE FLOOR STRUCTURE W/ DEAD AND WIND LOAD ANCHORS

FLORIDA BUILDING CODE (Non High Velocity Hurricane Zone)

©2021 TILTECO, INC

TILTECO INC.
TILLIT TESTING & ENGINEERING COMPANY
6355 N.W. 36th. St., Ste. 305, VIRGINIA GARDENS, FL 33166
Phone : (305)871-1531 . Fax : (305)871-1530
e-mail: tilteco@aol.com
CA-0006719
WALTER A. TILLIT Jr. P.E.
FLORIDA Lic. # 44167

HR-250DG CAPTURED DRY GLAZED
CURTAIN WALL SYSTEM
LARGE MISSILE IMPACT LAMINATED GLASS

Oldcastle BuildingEnvelope™
803 Airport Rd - Terrell, TX 75160
www.OldcastleBE.com - Phone 800-869-4567

REV. No	DESCRIPTION	DATE	REV. No	DESCRIPTION	DATE
1	-	-	3	-	-
2	-	-	4	-	-

F.R.L
DRAWN BY:

05/13/2021
DATE

21-068
DRAWING No

SHEET 33 OF 36

WALTER A. TILLIT JR.
LICENSE
No. 44167
STATE OF
FLORIDA
PROFESSIONAL ENGINEER

P.E. SEAL/SIGNATURE/DATE

JAMB CONNECTION TO EXISTING INTERMEDIATE FLOOR STRUCTURE W/ DEAD OR WIND LOAD ANCHOR (PLAN)

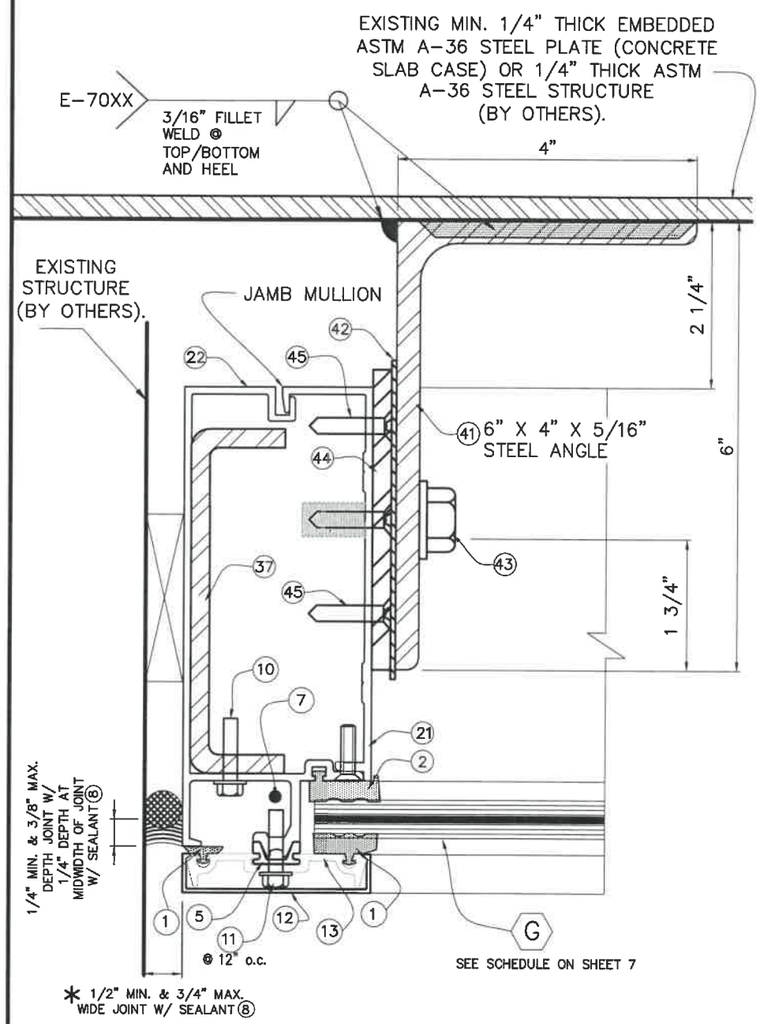

SECTION "E-E" @ JAMB

* NOTE: ABOVE INDICATED MAXIMUM AND MINIMUM VALUES FOR SPECIFIED SEALANT VERTICAL JOINT WIDTH AT JAMBS CONNECTED TO WALL HAVE BEEN DETERMINED ONLY TAKING INTO CONSIDERATION THE ACTUAL MOVEMENT OF GLASS WALL AT JAMBS DUE TO THERMAL, WIND AND ITS OWN CONSTRUCTION TOLERANCE, AND NOT PERFORMANCE FACTORS FROM THE SURROUNDING STRUCTURE.

CORNER MULLION CONNECTION TO EXISTING INTERMEDIATE FLOOR STRUCTURE W/ DEAD OR WIND LOAD ANCHORS (PLAN)

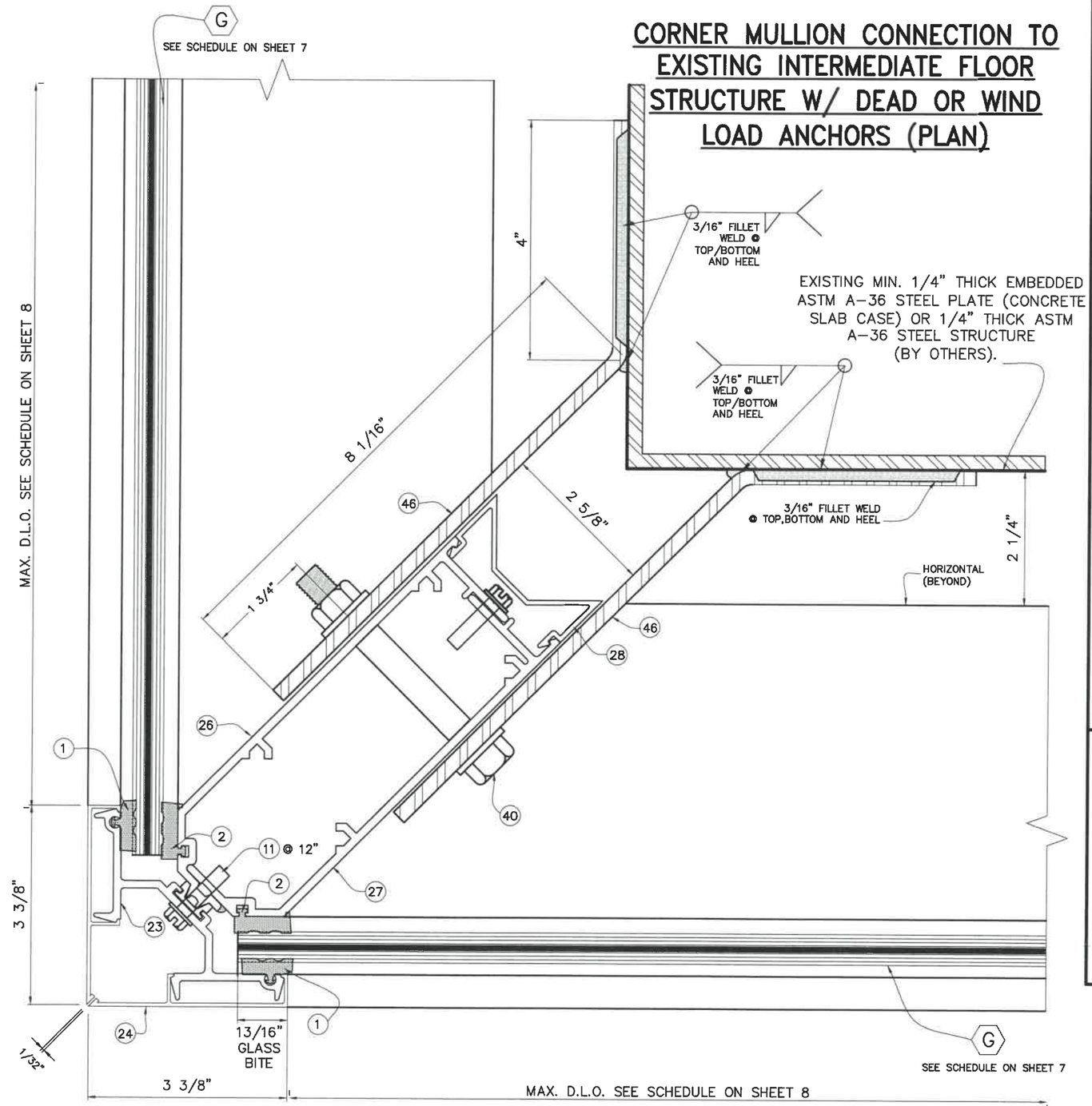

SECTION "F-F" @ CORNER MULLION

FLORIDA BUILDING CODE (Non High Velocity Hurricane Zone)

HR-250DG CAPTURED DRY GLAZED CURTAIN WALL SYSTEM
LARGE MISSILE IMPACT LAMINATED GLASS

Oldcastle BuildingEnvelope™
803 Airport Rd - Terrell, TX 75160
www.OldcastleBE.com - Phone 800-869-4567

REV. No	DESCRIPTION	DATE	REV. No	DESCRIPTION	DATE
1	-	-	3	-	-
2	-	-	4	-	-

F.R.L
DRAWN BY:

05/13/2021
DATE

21-068
DRAWING No

SHEET 34 OF 36

©2021 TILTECO, INC

TILTECO INC.
TILLIT TESTING & ENGINEERING COMPANY
6355 N.W. 36th. St., Ste. 305, VIRGINIA GARDENS, FL 33166
Phone : (305)871-1530 , Fax : (305)871-1531
e-mail: tilteco@aol.com
CA-0006719
WALTER A. TILLIT Jr. P.E.
FLORIDA Lic. # 44167

P.E. SEAL/SIGNATURE/DATE

WALTER A. TILLIT JR. LICENSE No. 44167 STATE OF FLORIDA PROFESSIONAL ENGINEER

DOOR HEADER CONNECTION TO CURTAIN WALL HORIZONTALS

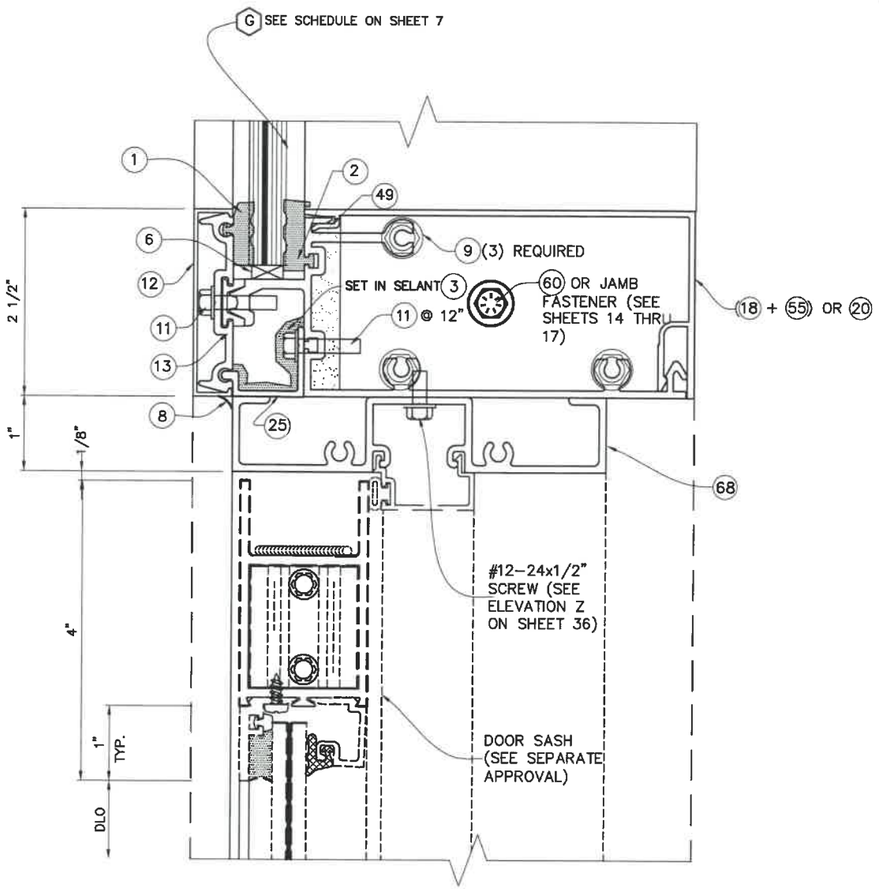

10
DR HEADER

DOOR SILL CONNECTION TO POURED CONCRETE STRUCTURE AND TO ADJACENT CURTAIN WALL MULLION "D" (SEE SHEET 9 FOR DEFINITION OF "D")

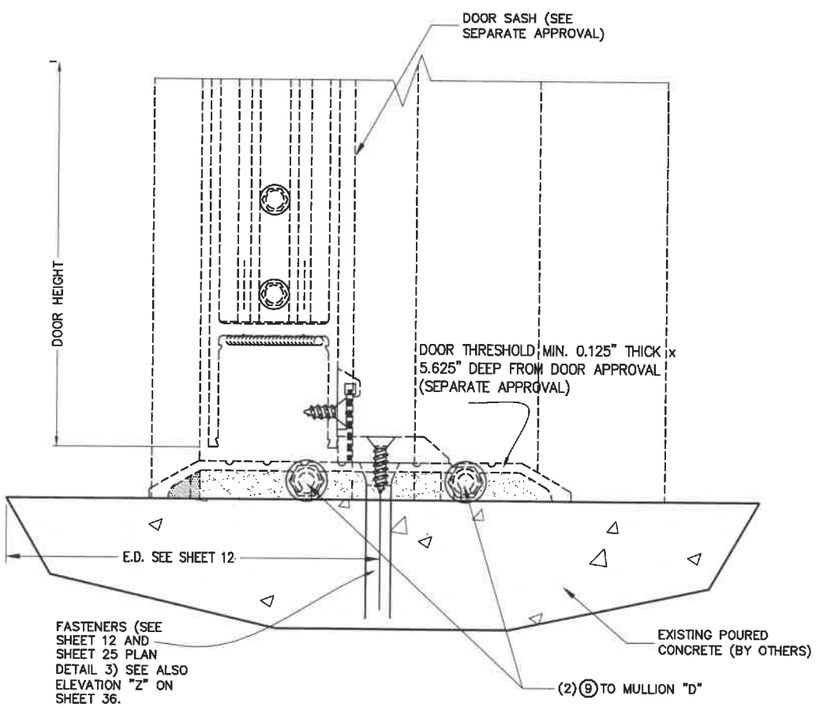

13
DOOR BM RAIL

FLORIDA BUILDING CODE (Non High Velocity Hurricane Zone)

HR-250DG CAPTURED DRY GLAZED CURTAIN WALL SYSTEM
LARGE MISSILE IMPACT LAMINATED GLASS

Oldcastle BuildingEnvelope™
803 Airport Rd - Terrell, TX 75160
www.OldcastleBE.com - Phone 800-869-4567

REV. No	DESCRIPTION	DATE	REV. No	DESCRIPTION	DATE
1	-	-	3	-	-
2	-	-	4	-	-

F.R.L
DRAWN BY:

05/13/2021
DATE

21-068
DRAWING No

SHEET 35 OF 36

©2021 TILTECO, INC

TILTECO INC.
TILLIT TESTING & ENGINEERING COMPANY
6355 N.W. 36th. St., Ste. 305, VIRGINIA GARDENS, FL 33166
Phone : (305)871-1530 , Fax : (305)871-1531
e-mail: tilteco@aol.com
CA-0006719
WALTER A. TILLIT Jr. P.E.
FLORIDA Lic. # 44167

P.E. SEAL/SIGNATURE/DATE

WALTER A. TILLIT JR. LICENSE No. 44167 STATE OF FLORIDA PROFESSIONAL ENGINEER

DOOR JAMBS CONNECTION TO CURTAIN WALL

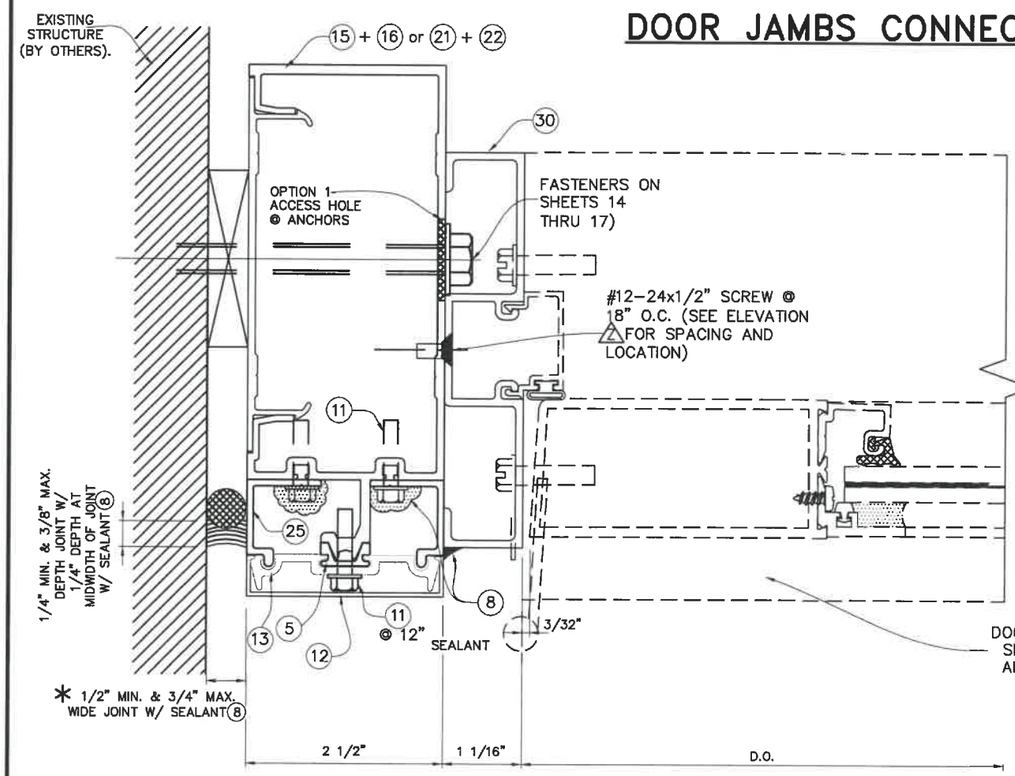

6

DOOR JAMB TO CURTAIN WALL JAMB

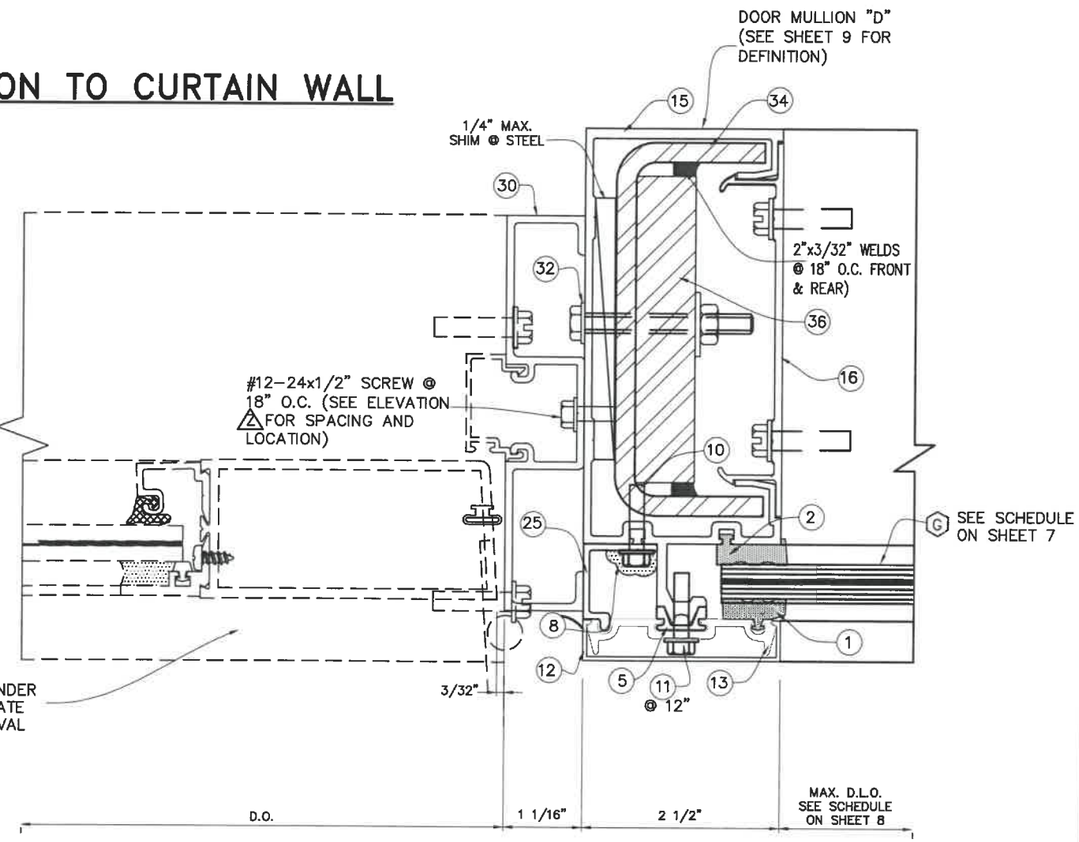

7

DOOR JAMB TO CURTAIN WALL DOOR JAMB MULLION

* NOTE: ABOVE INDICATED MAXIMUM AND MINIMUM VALUES FOR SPECIFIED SEALANT VERTICAL JOINT WIDTH AT JAMBS CONNECTED TO WALL HAVE BEEN DETERMINED ONLY TAKING INTO CONSIDERATION THE ACTUAL MOVEMENT OF GLASS WALL AT JAMBS DUE TO THERMAL, WIND AND ITS OWN CONSTRUCTION TOLERANCE, AND NOT PERFORMANCE FACTORS FROM THE SURROUNDING STRUCTURE.

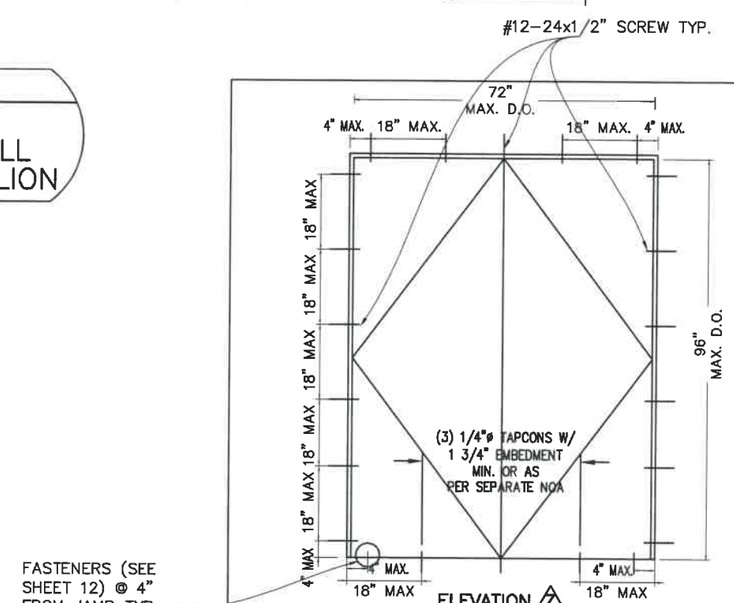

ELEVATION 2

LOCATIONS FOR DOOR FRAME ATTACHMENTS

ABOVE DIMENSIONS ARE MAXIMUM SIZES TESTED

FLORIDA BUILDING CODE (Non High Velocity Hurricane Zone)

HR-250DG CAPTURED DRY GLAZED CURTAIN WALL SYSTEM
LARGE MISSILE IMPACT LAMINATED GLASS

F.R.L DRAWN BY:

05/13/2021 DATE

21-068 DRAWING No

SHEET 36 OF 36

Oldcastle BuildingEnvelope™
803 Airport Rd - Terrell, TX 75160
www.OldcastleBE.com - Phone 800-869-4567

REV. No	DESCRIPTION	DATE	REV. No	DESCRIPTION	DATE
1	-	-	3	-	-
2	-	-	4	-	-

©2021 TILTECO, INC

TILTECO INC.
TILLIT TESTING & ENGINEERING COMPANY
6355 N.W. 36th. St., Ste. 305, VIRGINIA GARDENS, FL 33166
Phone : (305)871-1530 . Fax : (305)871-1531
e-mail: tilteco@aol.com
CA-0006719
WALTER A. TILLIT Jr. P.E.
FLORIDA Lic. # 44167

WALTER A. TILLIT JR. LICENSE No. 44167 STATE OF FLORIDA PROFESSIONAL ENGINEER

P.E. SEAL/SIGNATURE/DATE